BIXOLON

User's Manual

XT6-40 Series

Industrial Label Printer

Ver. 1.02





www.bixolon.com

Table of Contents

Copyright....4
WARNING & CAUTION....8
Manual Introduction....10
Printer Introduction....12

1. Content Confirmation....14

2. Product Part Names....15
2-1 Printer Part Names....15
2-2 Major Control Part Names(Standard Model)....20
2-2-1 Control Panel....20
2-2-2 Detailed Descriptions....21
2-3 Major Control Part Names(Touch Screen Model)....26
2-3-1 Control Panel....26
2-3-2 Detailed Descriptions....27

3. Installation & Usage....32
3-1 Printer Installation Placings....32
3-2 Power Connection....33
3-3 Interface....34
3-3-1 Standard Interface....35
3-3-2 Option Interface....36
3-4 Media Installation....37
3-4-1 Media Installation Method of Standard Model....37
3-4-2 Media Installation Method of Auto Cutter (optional) Model....40
3-4-3 Media Installation Method of Peeler (optional) Model....42
3-4-4 Media Installation Method of Internal Rewinder(optional- Liner Take-up only) Model .45
3-4-5 Media Installation Method of External Rewinder(optional) Model....51
3-4-6 Media Installation method for 1.5inch Media Core Model....57
3-4-7 How To Install Media Externally....59
3-5 How to Use Media Damper (Standard Model)....60
3-6 Ribbon Installation....61
3-6-1 Ribbon Type....61
3-6-2 Ribbon Installation Method....62
3-6-3 Load Adjustment by Ribbon Length....64
3-6-4 Ribbon Remove Method....66
3-7 Print Head Load Control Method....68
3-8 Ribbon Guide Control Method....69
3-9 How to Fine Tune Print Head Position....71
3-10 How to Adjust Near-end Sensor(Optional) Position....74

4. Printer Setting....75
4-1 Menu Composition(Standard Model, Touch Screen Model)....75
4-2 Menu Select Method(Standard Model)....79
4-3 Setting Confirm Method(Standard Model)....81

4-4 Menu Select Method (Touch Screen Model) 83
4-5 Setting Confirm Method(Touch Screen Model) 84
4-6 Setting Menu Explanation(Standard, Touch Screen Model) 86
4-6-1 Setting 86
4-6-2 GPIO 90
4-7 Interface Menu Explanation(Standard, Touch Screen Model) 92
4-7-1 Serial 92
4-7-2 Ethernet 93
4-7-3 WLAN 94
4-7-4 Bluetooth 97
4-8 Sensor Menu Explanation(Standard, Touch Screen Model) 98
4-9 Files Menu Explanation(Standard, Touch Screen Model) 99
4-9-1 Saved File 99
4-9-2 Twin Function 100
4-9-3 Firmware Update 105
4-10 Tools Menu Explanation(Standard, Touch Screen Model) 106
4-11 Info Menu Explanation(Standard, Touch Screen Model) 109
4-12 RFID Menu Explanation 110

5. Detailed Features 111
5-1 Pause/Cancel 111
5-1-1 Pause/Resume Function 111
5-1-2 Print Cancellation 112
5-2 Smart Media Detection 113
5-3 Gap Sensor Auto Calibration Mode 113
5-4 Black Mark Sensor Auto Calibration Mode 114
5-5 Media Sensor Manual-Calibration 115
5-6 Sensor Sensitivity 117
5-7 Data Dump Mode 117
5-8 Factory Reset 118
5-9 SWC (Simple Wi-Fi Connect) 118
5-10 Print Standby Mode 119
5-10-1 About Print Standby Mode 119
5-10-2 How to switch the printer from Standby Mode to Print Ready Mode 119
5-11 RFID Auto Calibration(RFID Model) 120

6. Maintenance 121
6-1 Cleaning Printer 121
6-2 Cleaning Print Head 122
6-3 Cleaning Platen Roller 123
6-4 Cleaning Auto Cutter (optional) 124
6-5 Cleaning Peeler Module (optional) 126

7. Specifications 127
7-1 Printer Specifications 127
7-2 Label Types Specifications 128

Copyright

© BIXOLON Co., Ltd. All rights reserved.

This user manual and all property of the product are protected under copyright law.
It is strictly prohibited to copy, store, and transmit the whole or any part of the manual and any property of the product without the prior written approval of BIXOLON Co., Ltd.
The information contained herein is designed only for use with this BIXOLON product.
BIXOLON is not responsible for any direct or indirect damages, arising from or related to use of this information.

• The BIXOLON logo is the registered trademark of BIXOLON Co., Ltd.
• All other brand or product names are trademarks of their respective companies or organizations.

BIXOLON maintains ongoing efforts to enhance and upgrade the functions and quality of all our products.
In the following, product specifications and/or user manual content may be changed without prior notice.

Notice - EU

This wireless device is class A that is considered to be used in an industrial environment.

Caution

Electronics, such as printers, are prone to damage by static electricity. Therefore, to protect the printer from static electricity, be sure to turn off the printer before connecting or disconnecting the cable to the rear of the printer. If the printer is damaged by static electricity, contact your local dealer.

This euipmeqnt is not suitable for use in locations where children are likely to be present.
When the printer is operating with the media cover open, do not wear anything that can touch the drive, such as clothing, necklaces, rings, watches, or employee certificates close to it. Also, keep yourself away from the printer as it is dangerous for some parts of the body to come into contact with it. If an object or part of your body touches the drive, immediately disconnect the power cord or turn off the power switch on the back of the product.

If the battery is not replaced correctly, there is a risk of explosion. Replace only with the same model or equivalent product specified by the manufacturer. When the battery is used up, be sure to tape the terminals and insulate them and dispose at the designated place in accordance with the relevant laws and ordinances set by the state.

Warning

Hazardous moving parts
Keep fingers and other body parts away
Pull the print head lever can be stop all moving parts.

IEC 60417-6057 (2011-05) for other moving parts.

Mise en garde

Les appareils électroniques, tels que les imprimantes, risquent d'être endommagés par l'électricité statique. Par conséquent, pour protéger l'imprimante de l'électricité statique, veillez à l'éteindre avant de connecter ou de déconnecter le câble situé à l'arrière de celle-ci. Si l'imprimante est endommagée par l'électricité statique, contactez votre revendeur local

Cet appareil n'est pas adapté d'utilser dans des endroits où des enfants sont probablement d'être présents.

Lorsque l'imprimante fonctionne avec le capot ouvert, ne portez rien qui puisse entrer en contact avec le mécanisme, tel que des vêtements, des colliers, des bagues, des montres ou des certificats d'employé à proximité. Éloignez-vous également de l'imprimante car il est dangereux que certaines parties du corps entrent en contact avec celle-ci. Si un objet ou une partie de votre corps entre en contact avec le mécanisme, débranchez immédiatement le câble d'alimentation ou éteignez l'interrupteur situé à l'arrière du produit.

Si la batterie n'est pas remplacée correctement, il existe un risque d'explosion. Remplacez-la uniquement avec le même modèle ou un produit équivalent approuvé par le fabricant. Lorsque la batterie est épuisée, veillez à coller du ruban adhésif sur les bornes, à l'isoler et à la jeter de manière adéquate, conformément aux lois et réglementations locales et nationales en vigueur.

Attention

Pièces mobiles dangereuses
Veillez à ce que vos doigts ou toute partie du corps n'entre(nt) pas en contact avec ces pièces. Tirez le levier de la tête d'impression pour arrêter toutes les pièces en movement.

IEC 60417-6057 (2011-05) pour les autres pièces mobiles.

Compliance information

This device complies with Part 15 of the FCC Rules. Operation is subject to the following two conditions: (1) This device may not cause harmful interference, and (2) This device must accept any interference received, including interference that may cause undesired operation.

This equipment has been tested and found to comply with the limits for a Class A digital device pursuant to Part 15 of the FCC Rules. These limits are designed to provide reasonable protection against harmful interference when the equipment is operated in a commercial environment. This equipment generates uses, and can radiate radio frequency energy and, if not installed and used in accordance with the instruction manual, may cause harmful interference to radio communications. Operation of this equipment in a residential area is likely to cause harmful interference in which case the user will be required to correct the interference at his own expense.

Caution: Exposure to Radio Frequency Radiation.
To comply with FCC RF exposure compliance requirements, a separation distance of at least 20 cm must be maintained between the antenna of this device and all persons.

Caution: Any Changes or modifications not expressly approved by the manufacturer could void the user's authority to operate the equipment.

Class A Digital Device : Wired Device
This Apparatus complies with class “A” limits for radio interference as specified in the Canadian department of communications radio interference regulations.

This Class A digital apparatus complies with Canadian ICES-003.

Appareil numérique de classe A: appareil filaire
Get appareil est conforme aux normes class “A” d’interference radio tel que specifier par ministre canadien des communications dans les reglements d’interference radio.

Cet appareil numérique de la classe A est conform à la norme NMB-003 du Canada.

Waste Electrical and Electric Equipment (WEEE)



This marking shown on the product or its literature, indicates that is should not be disposed with other household wastes at the end of its working life, To prevent possible harm to the environment or human health from uncontrolled waste disposal, please separate this from other types of wastes and recycle it responsibly to promote the sustainable reuse of material resources. Household users should contact either the retailer where they purchased this product, or their local government office, for details of where and how they can take this item for environmentally safe recycling. Business users should contact their supplier and check the terms and conditions of the purchase contract. This product should not be mixed with other commercial wastes for disposal.

WARNING & CAUTION

It describes death, physical injuries, serious financial losses, and damage to data etc. that can be caused to the user.

Do not connect multiple products to one single power outlet. Do not connect the product to a loose power outlet.
Use only power outlets that meet the standard. Connect the power cord only to a grounded power outlet. **Noncompliance may cause electric shock or fire.**



Use only authentic products from BIXOLON. **The company will not provide post-sale support for damage or other quality issues that any fake (refurbished) products may incur.**



Do not bend or strain the power cord excessively. Push the power cord all the way into the power outlet lest it remain loose. Make sure to hold the cord tight when separating it from the power outlet. Do not remove the power cord while the product is in use. **Noncompliance may cause electric shock or fire.**



Keep small accessories or other packaging materials away from young children.
Beware: children may swallow them. **Mishandling the product may incur injuries. If a child has swallowed any such thing, see a doctor at once.**



Do not touch the power cord with wet hands when pulling it from a power outlet. If the power plug or outlet is smeared with extraneous matter, wipe it with a dry cloth. **Noncompliance may cause electric shock or fire.**

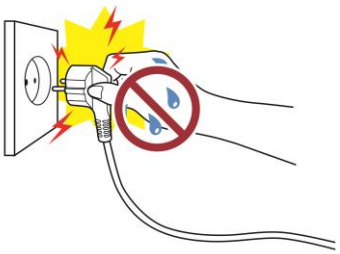

Do not allow the product to be damaged by heavy objects. **Noncompliance may cause electric shock or fire.**

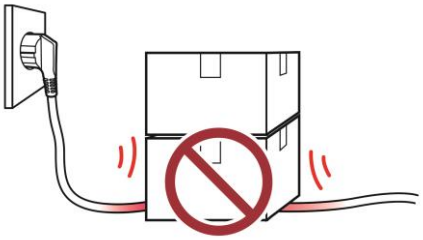

If the product emits a strange sound, burning smell, or smoke, turn off the power immediately and unplug the power cord. If the product is dropped or its exterior is damaged, turn off the power immediately and unplug the power cord. Do not subject the product to shock. **It may start a fire. It may damage the product.**

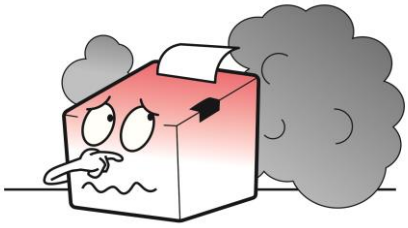

Install the product in a well-ventilated place by keeping it a certain distance from the wall. The product installed in certain places such as where a lot of fine dust is generated, where the temperature is too high or too low, where there is a lot of moisture or water, and at airports or stations that are used continuously for a long time may suffer serious quality problems due to the influence of the surrounding environment. **An increase in internal temperature may start a fire. Be sure to contact the place of purchase before installing the product.**

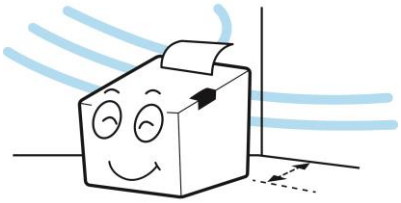

Install the product in a fixed place preventing it from tipping over. When moving the product, turn off the power and disconnect all cables connected to the product, including the power cord. **It may damage the product.**



Never disassemble, repair, or modify the product at your own discretion. **When repair is necessary, contact the place of purchase.**



Do not let any foreign substances enter the product. Do not place heavy objects, liquids, or metals on the product. **It may start a fire. It may damage the product.**



If there is a problem with the product, please contact the place of purchase. In addition, Bixolon website (http://www.bixolon.com) provides product repair.

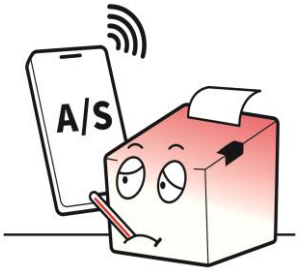

Manual Introduction

This manual provides basic information on printers and provides ways to install, use, and check them.
In order to protect the safety of users and prevent property damage, be fully familiar with this manual before using the product. Please use it.

1. Windows Driver Manual
   This manual provides information on the installation instructions and main functions of the windows driver.

2. Unified Label Utility-II Manual
   This manual provides information on the usage of software for function selection of this product, operating condition modification, etc.

3. Programming(SLCS) Manual
   This manual provides information on label printer commands.

4. True Font Downloader Manual
   This manual provides information on the usage of the font downloader that can download true type fonts and facilitate their usage as device fonts.

5. Network Connection Manual
   This manual provides information on the configuration and usage of network interface.

6. Bluetooth Connection Manual
   This manual provides information on connection instructions the Bluetooth interface.

7. Label Design Program Manual
   This manual provides information on the usage of the Windows PC program that can make labels by adding text, graphics, or barcodes at desired positions.

Manual Symbol Introduction

	**Precaution & Warning**	It describes death, physical injuries, serious financial losses, and damage to data etc. that can be caused to the user.
	**Note**	It provides additional information on the function and performance of the product.

Printer Introduction

XT6-40 series printers have been designed to be connected to various types of electronic devices such as computer peripheral devices.

The main features of the printer are as follows

1. Industrial Label Printer
2. Thermal Transfer / Direct Thermal Printing
3. XT6-40: Max 14ips(356mm/sec) printing speed
   XT6-43: Max 12ips(305mm/sec) printing speed
   XT6-46: Max 5ips(127mm/sec) printing speed

4. Print Width/Length
   - XT6-40: 104mm / 4,000mm
   - XT6-43: 105.7mm / 2,500mm
   - XT6-46: 105.6mm / 1,000mm

5. Media Width/Outer Diameter/Inner Diameter/Thickness
   : 25 ~ 114mm / Max. 203mm / 1.5 ~ 3inch / 0.06 ~ 0.3mm
6. Ribbon Width/Length/Type
   : 50 ~ 110mm / 450m / Wax, Wax Resin, Resin, Outside, Inside
7. Movable Gap & Notch Sensor, Movable Black Mark Sensor
8. 1GByte Flash / 1GByte SDRAM
9. 3.5 Inch Color Graphics TFT LCD + Keypad
   - Option: 5inch Color Touch Screen TFT LCD
10. 269 x 467 x 327 (W x D x H)
11. Support for multiple interfaces
    - Standard: USB & USB HOST(Front, Rear) & Serial & Ethernet
    - Option: Parallel, Combo(Bluetooth & WLAN), GPIO
12. Option: Peeler , Auto Cutter, Rewinder, RFID, Ribbon/Media Near-end sensor

Product Symbol Introduction

	AC (Alternation Current)
	DC (Direct Current)
	USB

1. Content Confirmation

The following items should all be contained in the printer package.
Contact the dealer from which the purchase was made if any item is damaged and/or missing.

Product

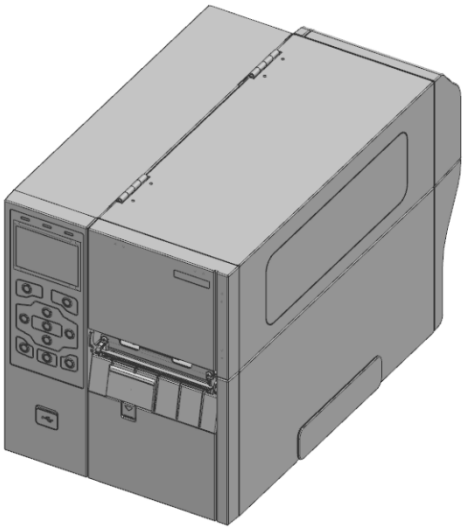

XT6-40 Series (Standard)

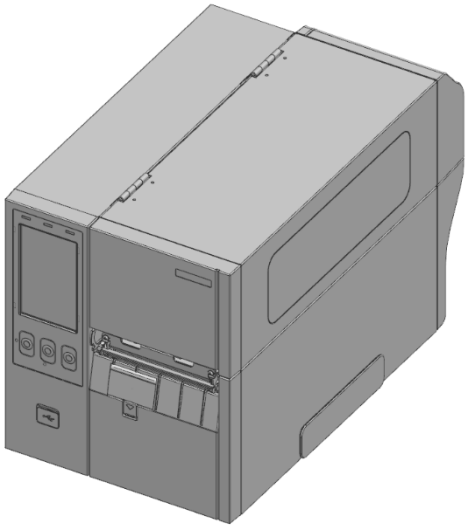

XT6-40 Series (Touch LCD, Optional)

Basic Components

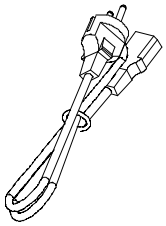

Power Cord



USB Cable

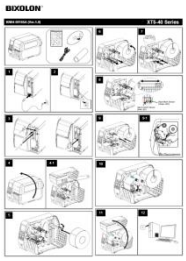

Quick Manual

Option Components



Serial (RS-232C) Cable



Parallel (IEEE1284) Cable

2. Product Part Names

2-1 Printer Part Names

- Front

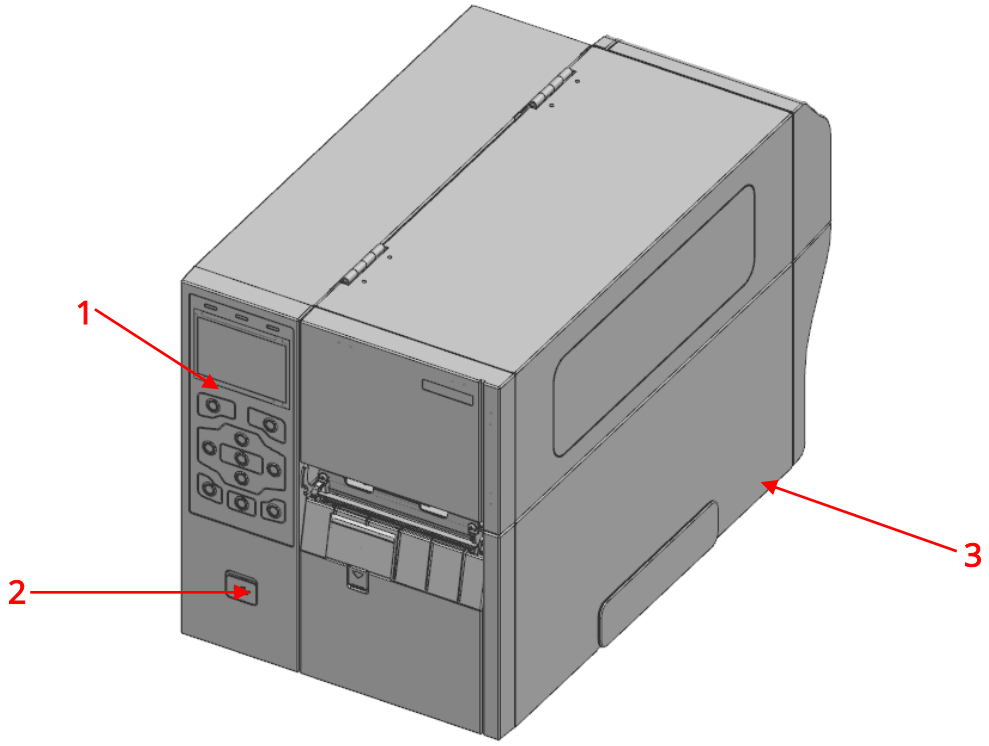

1	Control Panel	3	Media Cover
2	USB Host Port		

- Back

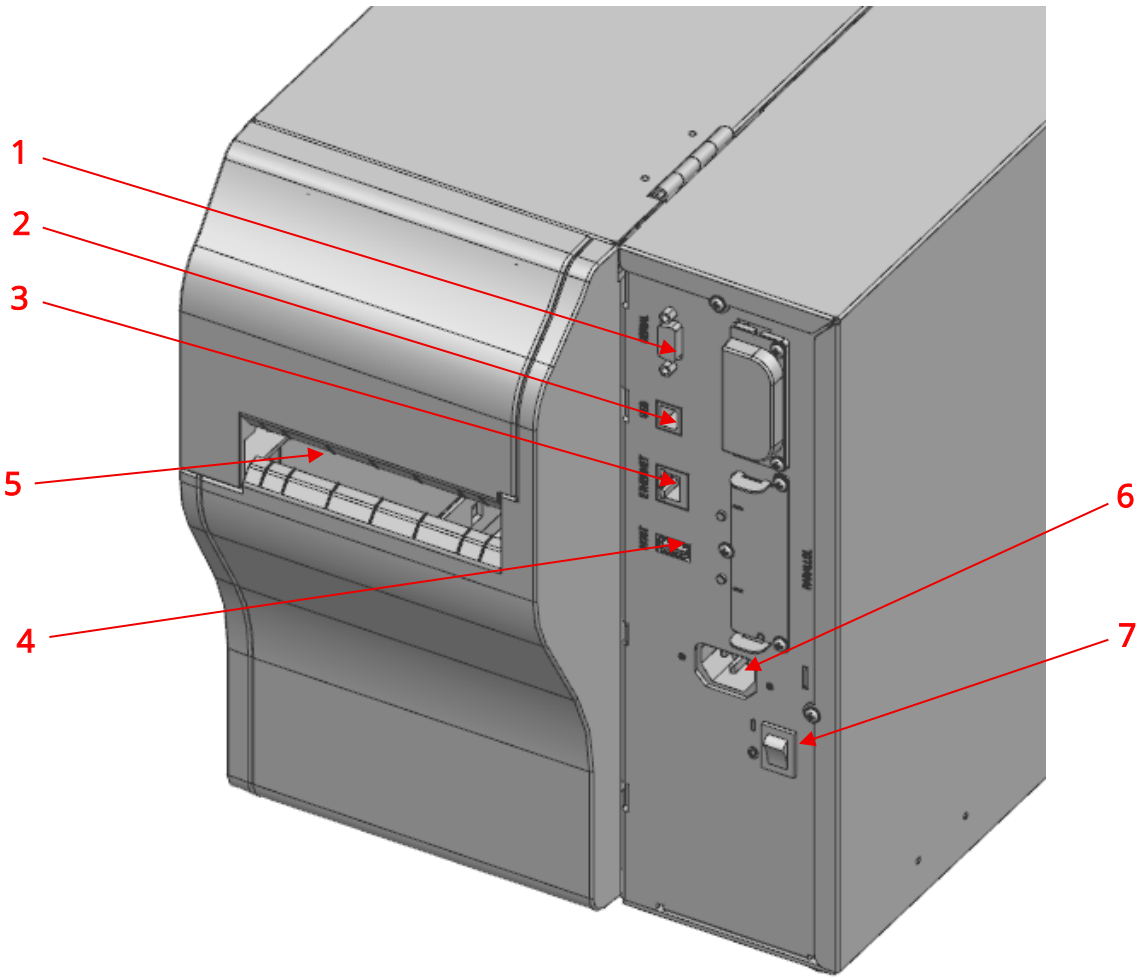

1	Serial(RS-232C) Port	5	Rear Access Slot(Media)
2	USB Port	6	Power Connector
3	Ethernet Port	7	Power Switch
4	USB Host Port		

- Internal

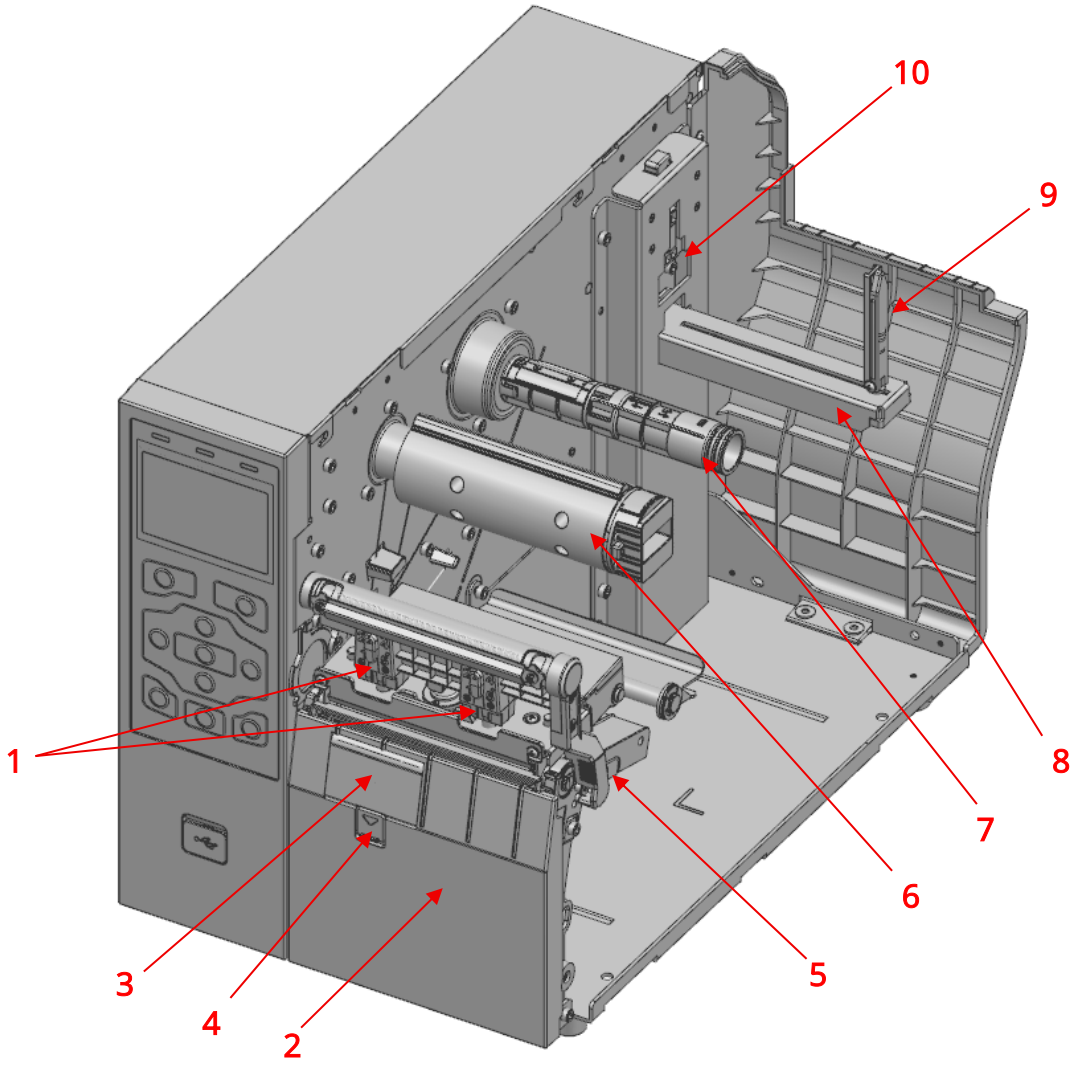

1	Print Head Pressure Adjustment	6	Ribbon Take-up Spindle
2	Cover STD	7	Ribbon Supply Spindle
3	Media Damper	8	Media Holder
4	Media Damper Button	9	Media Fixing Guide
5	Print Head Lever	10	Media Near-end Sensor(option)

- Internal

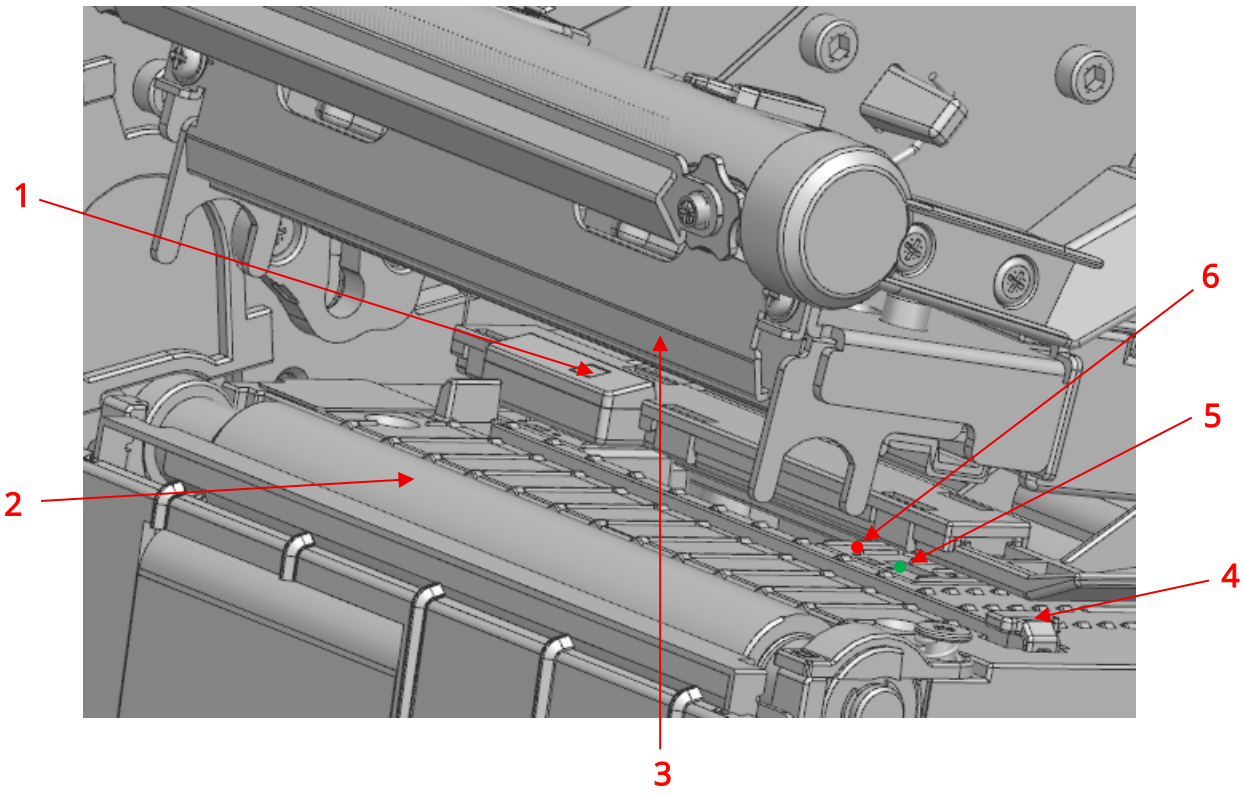

1	Ribbon Sensor	4	Media Guide
2	Platen Roller	5	Black Mark Sensor (Green LED)
3	Print Head	6	Gap & Notch Sensor (Red LED)

- Printer Option

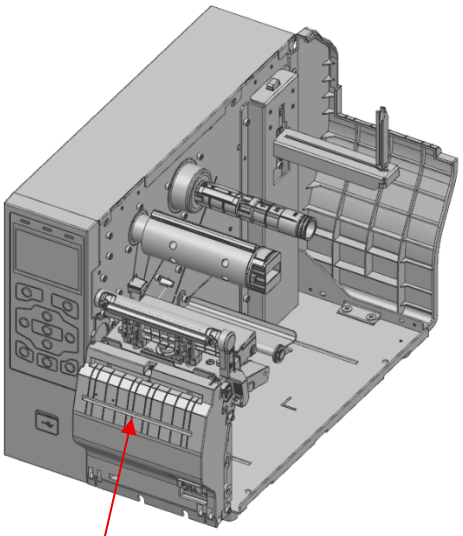

Auto Cutter

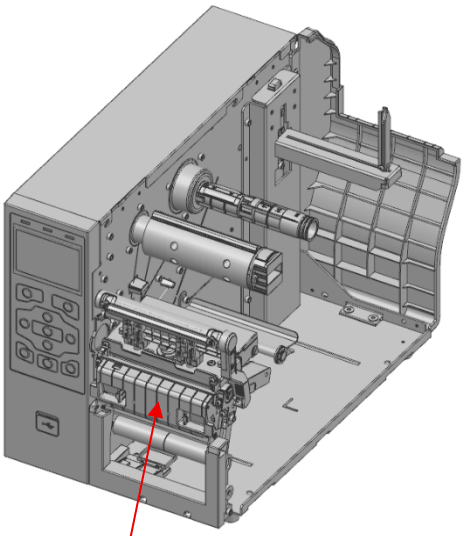

Peeler

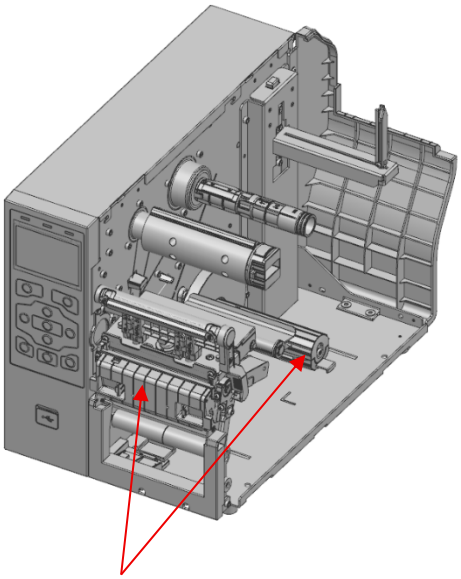

Peeler + Rewinder(internal)

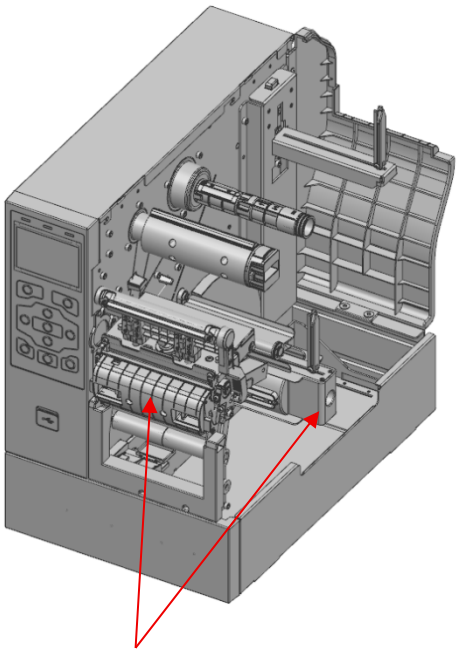

Peeler + Rewinder(external)

2-2 Major Control Part Names(Standard Model)

2-2-1 Control Panel



No	Description
1	Printer status LED
2	Interface status icon
3	Date, Time
4	Model name
5	Firmware version
6	Printer status
7	Main icon
8	Ethernet IP, WLAN IP
9	Function button
10	Direction button, Selection button
11	Printer operation button

2-2-2 Detailed Descriptions

2-2-2-1 Printer Status LED

List	Status	Explanation
POWER	ON	Printer power on
	OFF	Printer power off
STATUS	ON	Waiting for data reception
	BLINK	Receiving data
ERROR	BLINK	Print error
	OFF	In normal operation

2-2-2-2 Interface Status Icon

List	Status	Explanation
	ON	Ethernet is connected
	OFF	Ethernet is not connected
	ON	Not connected to AP
	OFF	WLAN communication is not supported
	ON	Connected to AP, Strength: 4
	ON	Connected to AP, Strength: 3
	ON	Connected to AP, Strength: 2
	ON	Connected to AP, Strength: 1
	ON	Bluetooth is not connected to the host
	OFF	Bluetooth communication is not supported
	ON	Bluetooth is connected to the host
	ON	USB device is connected
	OFF	USB device is not connected
	ON	Password feature is enabled
	OFF	Password feature is disabled
	ON	Receiving data
	OFF	No data received
	Blink	Data reception error
	ON	Media shortage detection

	ON	Ribbon capacity(m)
	ON	Ribbon capacity(m) when less than 30 m

2-2-2-3 Date, Time (RTC clock)

List	Explanation
YYYY-MM-DD	Date
12:00 AM/PM	Time

2-2-2-4 Model Name

List	Explanation
XT6-40	Model name

2-2-2-5 Firmware Version

List	Explanation
V01.00	Firmware version

2-2-2-6 Printer Status

List	Explanation
READY	Ready for print
STANDBY	Standing by for user input - button: Switch to Print Standby Mode without feeding any media - button: Feed one sheet of media to align the media position and switch to the Print Standby Mode
PRINTING	In printing
PAUSE	Printing pause
CANCEL	Canceled printing
F/W Downloading	Downloading firmware
PRINT HEAD OPEN	Print head is open
PRINT HEAD OVER TEMP	Print head has reached the maximum temperature
PRINT HEAD COLD TEMP	Print head has reached the minimum temperature
AUTO CUTTER JAM	Media is stuck in the auto cutter blade
MEADIA OUT	Media is not installed correctly
RIBBON OUT	Ribbon is not installed correctly
MEADIA JAM	Media is jammed and not printing normally
SENSING FAIL	Media is not recognized normally

2-2-2-7 Main Icons

List	Explanation
	Printer settings
	Interface settings
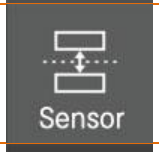	Sensor settings
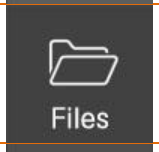	File settings
	Additional and other functions settings
	Providing printer information

2-2-2-8 Ethernet IP, WLAN IP

List	Explanation
LAN: 192.168.100.123	Ethernet IP
WLAN: 192.168.100.123	WLAN IP (displayed only when WLAN is supported)

2-2-2-9 Function Button

List	Explanation
	Used for selection, cancellation, storing, and deletion

2-2-2-10 Direction Button, Selection Button

List	Explanation
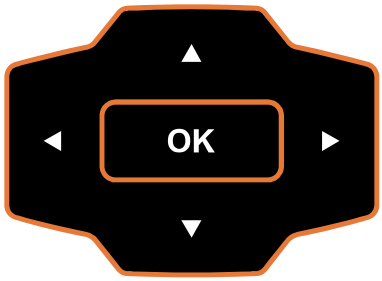	Used for menu selection

2-2-2-11 Printer Operation Button

List	Explanation
	Softly press and release the button to feed one label
	Press the button for 2 seconds during printing to pause printing
	Press the button for 2 seconds during printing to cancel printing

2-3 Major Control Part Names(Touch Screen Model)

2-3-1 Control Panel



No	Description
1	Printer status LED
2	Interface status icon
3	Time
4	Model name
5	Firmware version
6	Printer status
7	Main icon
8	Ethernet IP, WLAN IP
9	Date
10	Printer operation button

2-3-2 Detailed Descriptions

2-3-2-1 Printer Status LED

List	Status	Explanation
POWER	ON	Printer power on
	OFF	Printer power off
STATUS	ON	Waiting for data reception
	BLINK	Receiving data
ERROR	BLINK	Print error
	OFF	In normal operation

2-3-2-2 Interface Status Icon

List	Status	Explanation
	ON	Ethernet is connected
	OFF	Ethernet is not connected
	ON	Not connected to AP
	OFF	WLAN communication is not supported
	ON	Connected to AP, Strength: 4
	ON	Connected to AP, Strength: 3
	ON	Connected to AP, Strength: 2
	ON	Connected tsso AP, Strength: 1
	ON	Bluetooth is not connected to the host
	OFF	Bluetooth communication is not supported
	ON	Bluetooth is connected to the host
	ON	USB device is connected
	OFF	USB device is not connected
	ON	Password feature is enabled
	OFF	Password feature is disabled
	ON	Receiving data
	OFF	No data received
	Blink	Data reception error
	ON	Media shortage detection
	ON	Ribbon capacity(m)
	ON	Ribbon capacity(m) when less than 30 m

2-3-2-3 Date, Time (RTC clock)

List	Explanation
YYYY-MM-DD	Date
12:00 AM/PM	Time

2-3-2-4 Model Name

List	Explanation
XT6-40N/ XT6-40NR	Model name

2-3-2-5 Firmware Version

List	Explanation
V01.00	Firmware version

2-3-2-6 Printer Status

List	Explanation
READY	Ready for print
STANDBY	Standing by for user input - button: Switch to Print Standby Mode without feeding any media - button: Feed one sheet of media to align the media position and switch to the Print Standby Mode
PRINTING	In printing
PAUSE	Printing pause
CANCEL	Canceled printing
F/W Downloading	Downloading firmware
PRINT HEAD OPEN	Print head is open
PRINT HEAD OVER TEMP	Print head has reached the maximum temperature
PRINT HEAD COLD TEMP	Print head has reached the minimum temperature
AUTO CUTTER JAM	Media is stuck in the auto cutter blade
MEADIA OUT	Media is not installed correctly
RIBBON OUT	Ribbon is not installed correctly
MEADIA JAM	Media is jammed and not printing normally
SENSING FAIL	Media is not recognized normally

2-3-2-7 Main Icons

List	Explanation
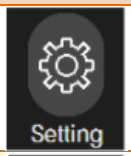	Printer settings
	Interface settings
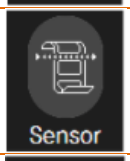	Sensor settings
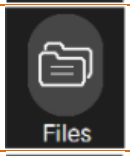	File settings
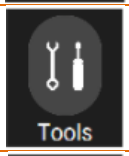	Additional and other functions settings
	Providing printer information
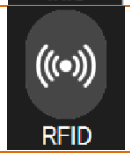	RFID Settings

2-3-2-8 Ethernet IP, WLAN IP

List	Explanation
LAN: 192.168.100.123	Ethernet IP
WLAN: 192.168.100.123	WLAN IP (displayed only when WLAN is supported)

2-3-2-9 Function Button

List	Explanation
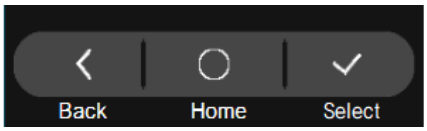	Select, Cancel, Save, Delete, Move to main menu

2-3-2-10 Printer Operation Button

List	Explanation
	Press the button to feed one label
	Press the button for 2 seconds during printing to pause printing
	Press the button for 2 seconds during printing to cancel printing

3. Installation & Usage

3-1 Printer Installation Placings

• Install the printer in a location that meets the following conditions.

- Allow sufficient space around the printer for proper ventilation.

- Do not place objects close to the back or bottom of the printer, which may hinder the air circulation.

- Install the printer on a flat and level surface.

- Avoid humid environment.

- Install in a place that does not exceed the protocol standard of the wireless communication or the specified maximum distance.

- For stable wireless communication, install in a place where there is no physical obstacle (wall, object, etc.).

3-2 Power Connection

• Connect power to the printer as shown below.

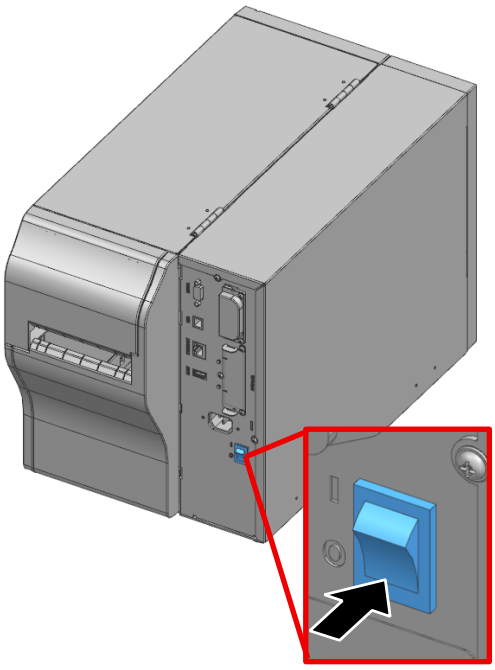

Power Switch OFF

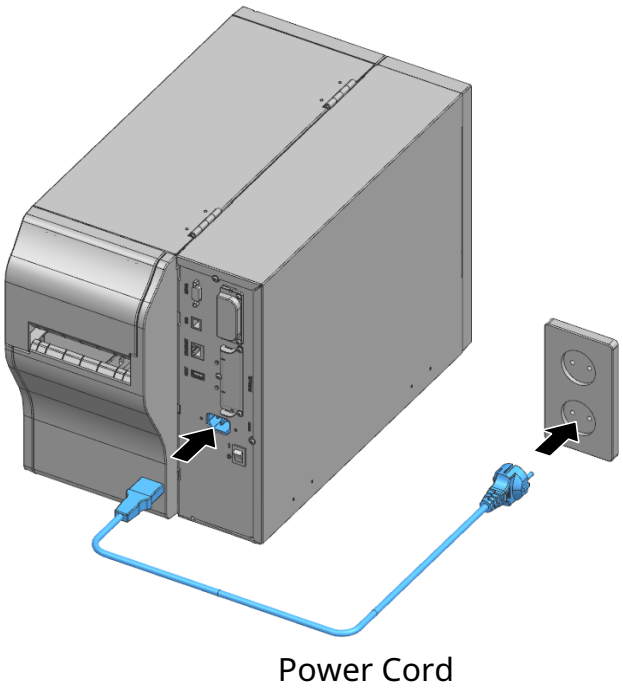

Power Cord

1) Turn off the printer power switch.

2) Connect the power cord to the printer.

3) Connect the power cord to a power source/outlet.

- For the safety of people and equipment, please use the appropriate power cord for your country or region.
- Be sure to turn off the printer before connecting the power cord to the printer. This can cause serious electrical damage and bodily injury.
- Do not operate the printer and power supply in a humid environment. This can cause serious electrical damage and bodily injury.
- Do not connect an input voltage beyond the specifications of the power supply. This may result in product damage and fire.

3-3 Interface

Shielded cables must be used to prevent radiation and reception of electrical noise. Use the shortest possible communication cable to minimize the detection of electrical noise in the cable.

- Serial(RS-232C) Cable (1.8m or less recommended)
- Parallel(IEEE1284) Cable
  (1.8m or less with ferrite core recommended)
- USB Type-B Cable (1.8m or less recommended)
- LAN(Ethernet) Cable (3m or less, CAT-5 or higher UTP Cable)

- Connecting unshielded communication cables is in violation of EMC standards. Use the cable approved by us.
- Do not bundle the communication cable with objects that may cause electrical noise and interference. The printer may be damaged.
- After turning off the power switch of printer, connect and disconnect the communication cable. This can cause serious electrical damage and bodily injury.

3-3-1 Standard Interface

This printer can use the following types of communication.
- LAN (Ethernet) Cable / USB Type-B Cable / Serial (RS-232C) Cable / USB Type-A Storage (*USB type dongle not supported)

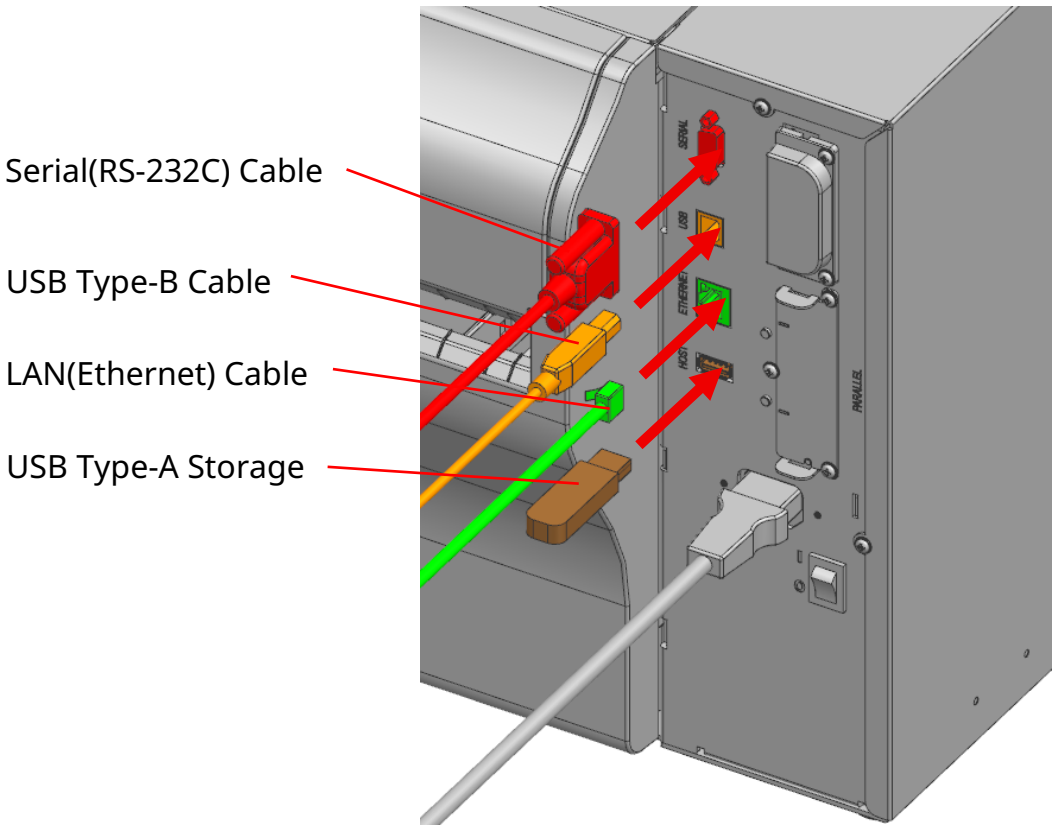

1) Turn off the power switch.

2) Connect the communication cable to the printer communication port to be used.
- Connect the LAN(Ethernet) cable to the Ethernet port.
- Connect the USB Type-B cable to the USB port.
- Connect the USB Type-A storage to the USB port.
- Connect Serial(RS-232C) cable to the serial port and tighten both screws.

Be aware that the product's electronic components may be damaged due to discharging of electrostatic energy that accumulates on the surface of the body or other objects.

3-3-2 Option Interface

This printer can use the following types of communication.

- Combo(Bluetooth & WLAN) / Parallel(IEEE1284) Cable / GPIO Cable

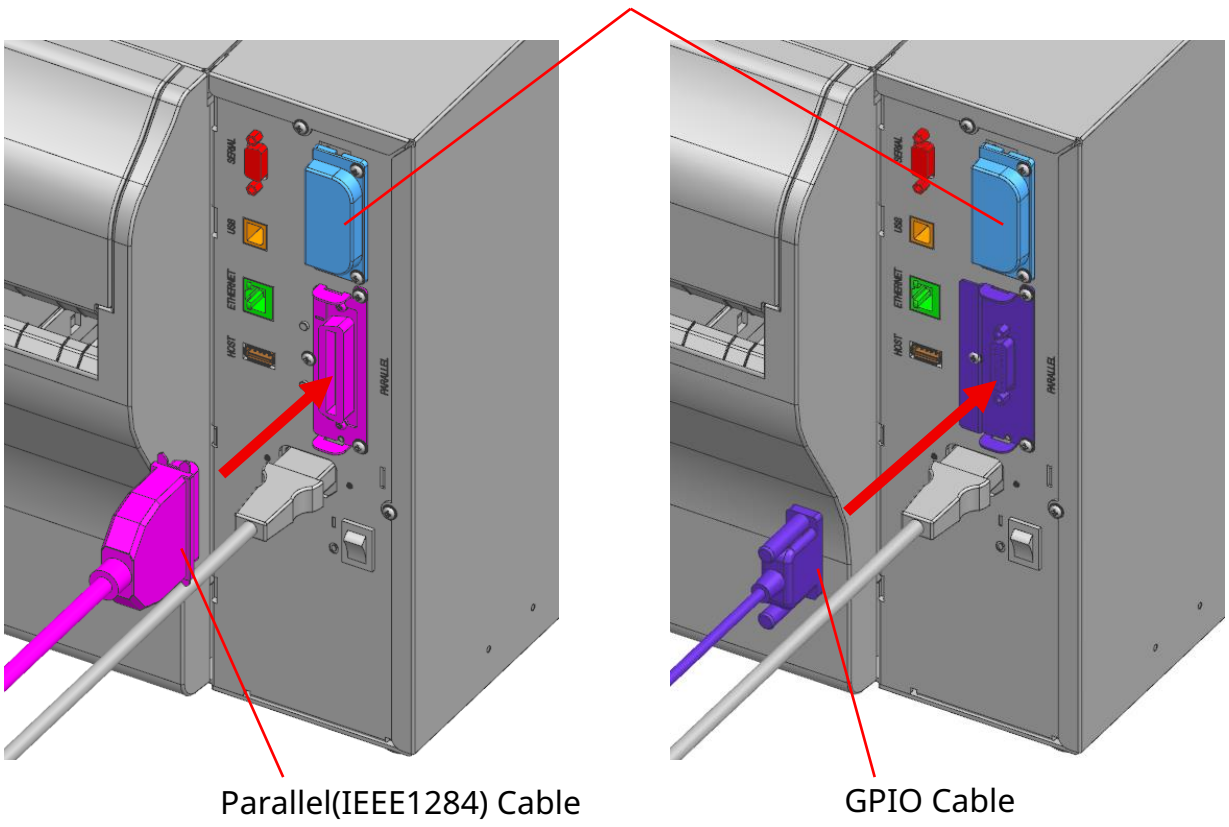

1) Turn off the power switch.

2) Connect the communication cable to the printer communication port to be used.

- Connect Parallel(IEEE1284) Cable to parallel port and fasten both clips.
- Connect GPIO Cable to GPIO port and tighten both screws.
- Wireless interface does not require a separate cable connection

Be aware that the product's electronic components may be damaged due to discharging of electrostatic energy that accumulates on the surface of the body or other objects.

3-4 Media Installation

3-4-1 Media Installation Method of Standard Model

For standard models, install media in the following ways:

1) Open the media cover.

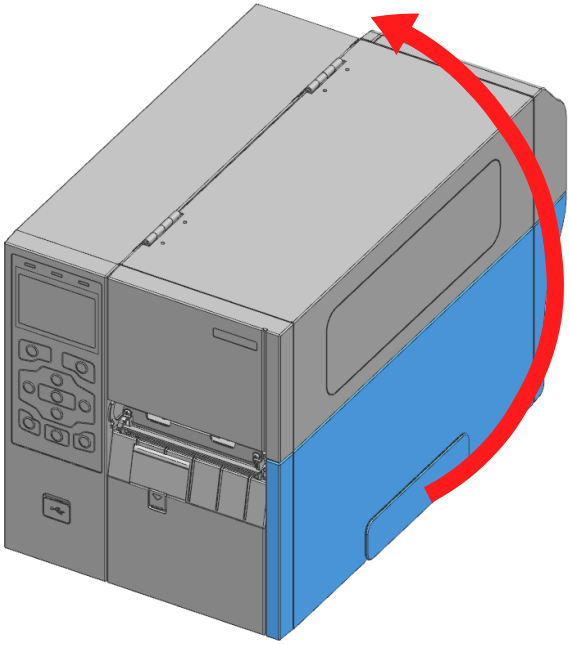

2) Open the print head lever. Flip down the media fixing guide and place the media in the media holder with print side up.

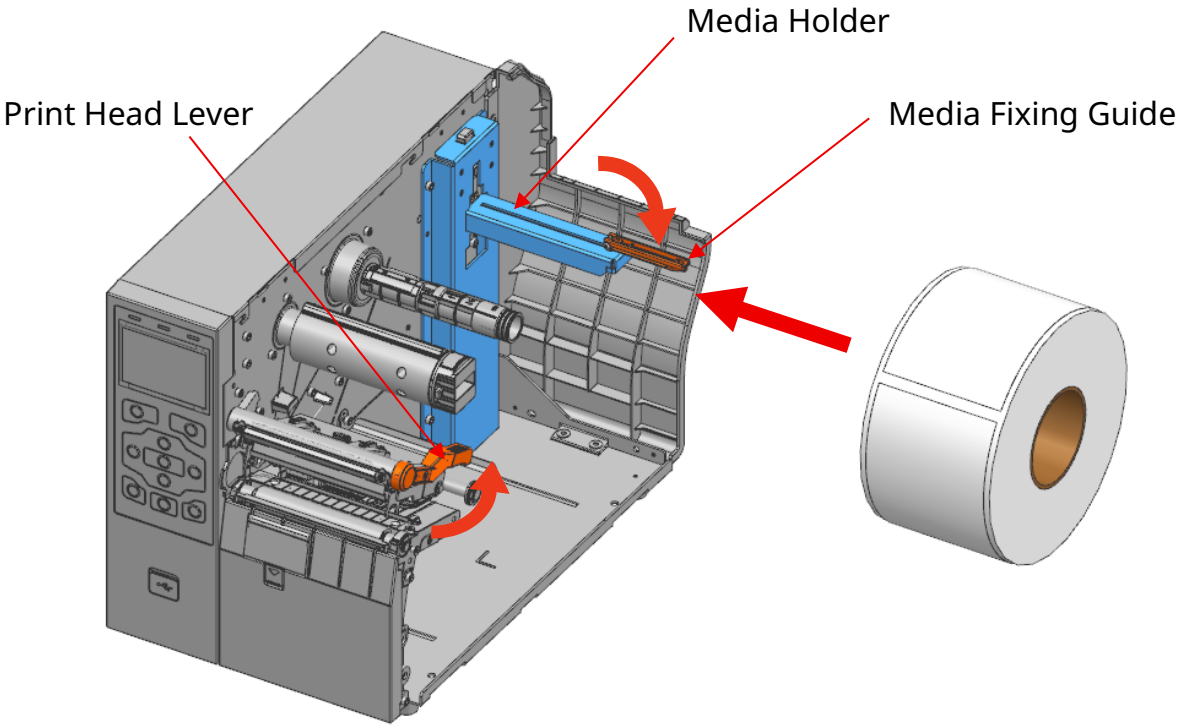

3) After flip up the media fixing guide, push the holder so that it is close to the media. Push the media guide to the right.

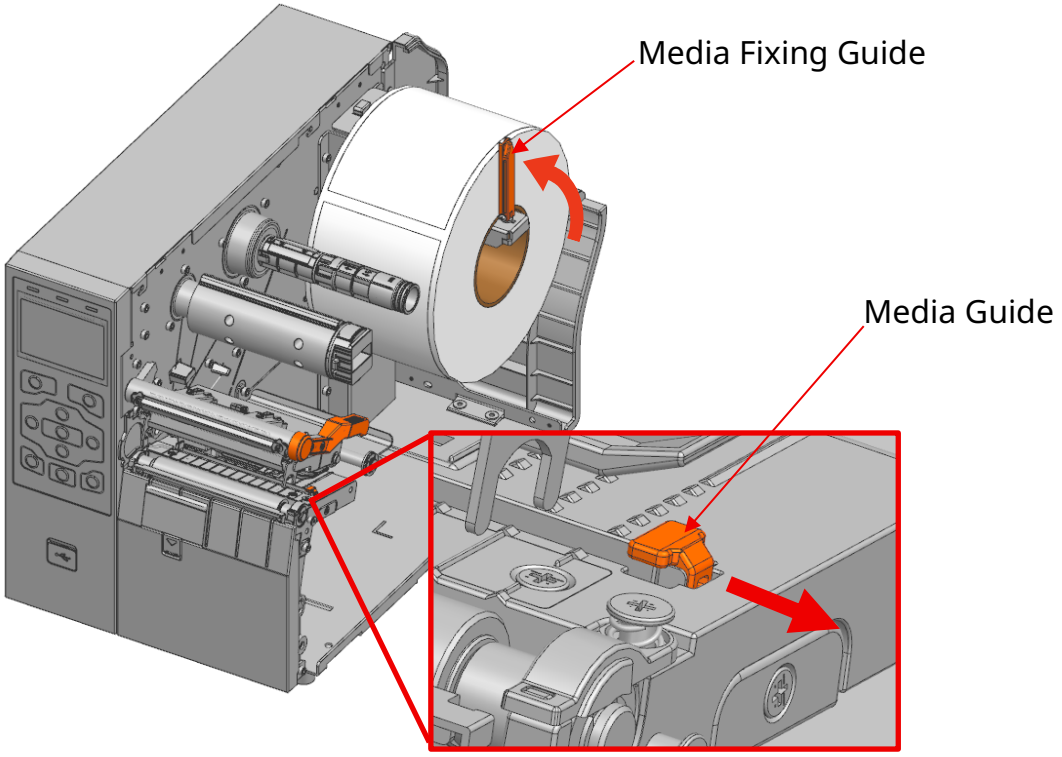

4) After inserting the media into the fixing guides, adjust the media guides to the media width.

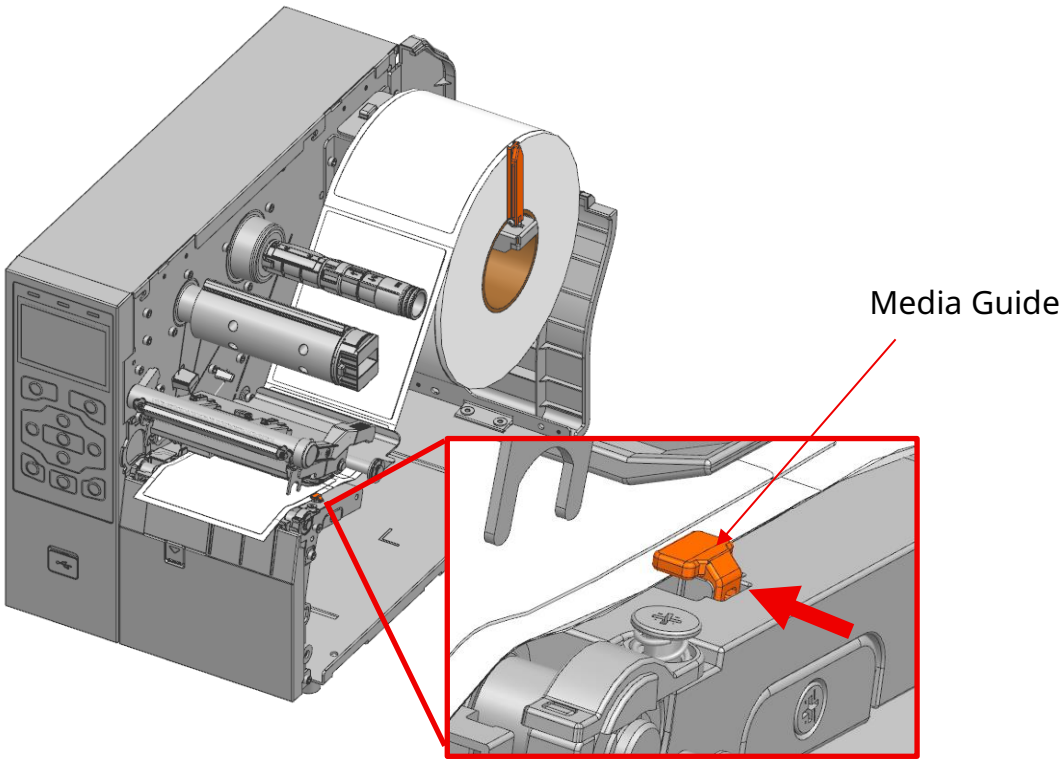

5) Please make sure the sensor position where media gap/black mark will pass through for sensing. Sensor(gap & notch sensor, black mark sensor) can be moved by the sensor lever.
Check the sensor position with LED color.

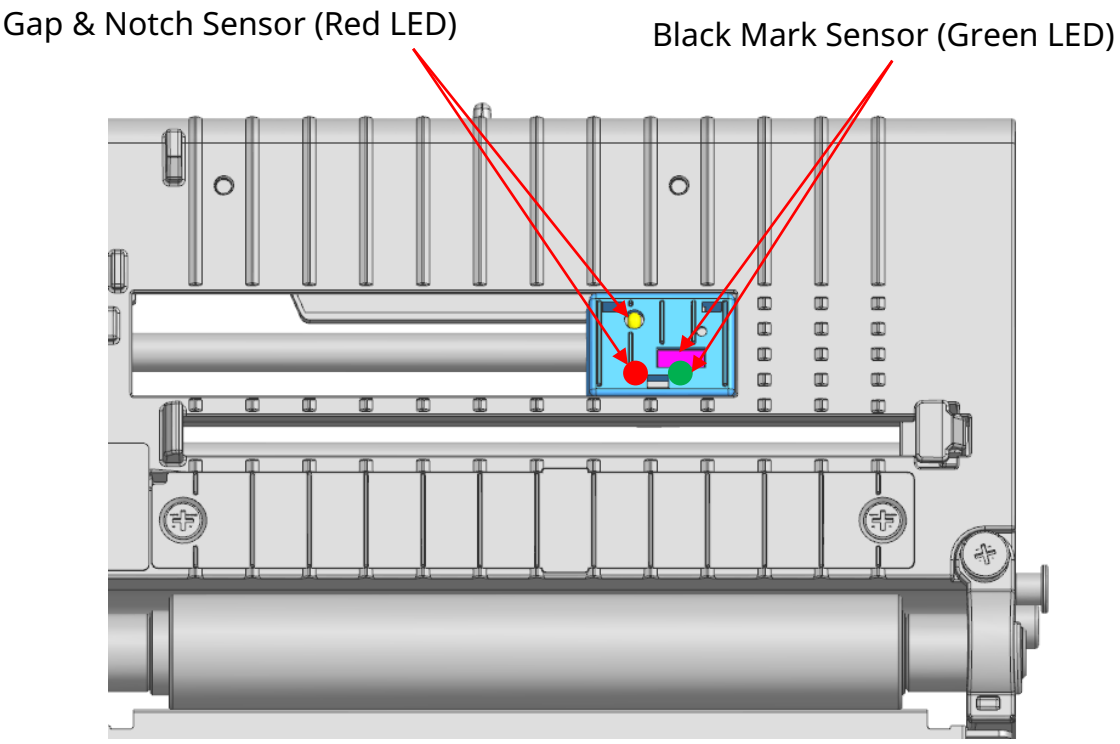

6) Close the print head lever and media cover.

- When opening or closing the cover, be careful not to pinch your fingers.
- Do not open the printer head levers while the printer is printing. The printer may be damaged.
- Change the media when the printer is not receiving data, or data may be lost.
- While the printer is operating, the printer head gets very hot, so turn off the power and let it cool down completely. The hot printer head can cause serious burns.

3-4-2 Media Installation Method of Auto Cutter (optional) Model

Use the Auto Cutter to cut the printed media.
For Auto Cutter Model, install media in the following ways:

1) Refer to '3-4-1 Media Installation Method of Standard Model' to install media, adjust media guide and sensor position.

2) Install the media through the auto cutter as shown in the figure.

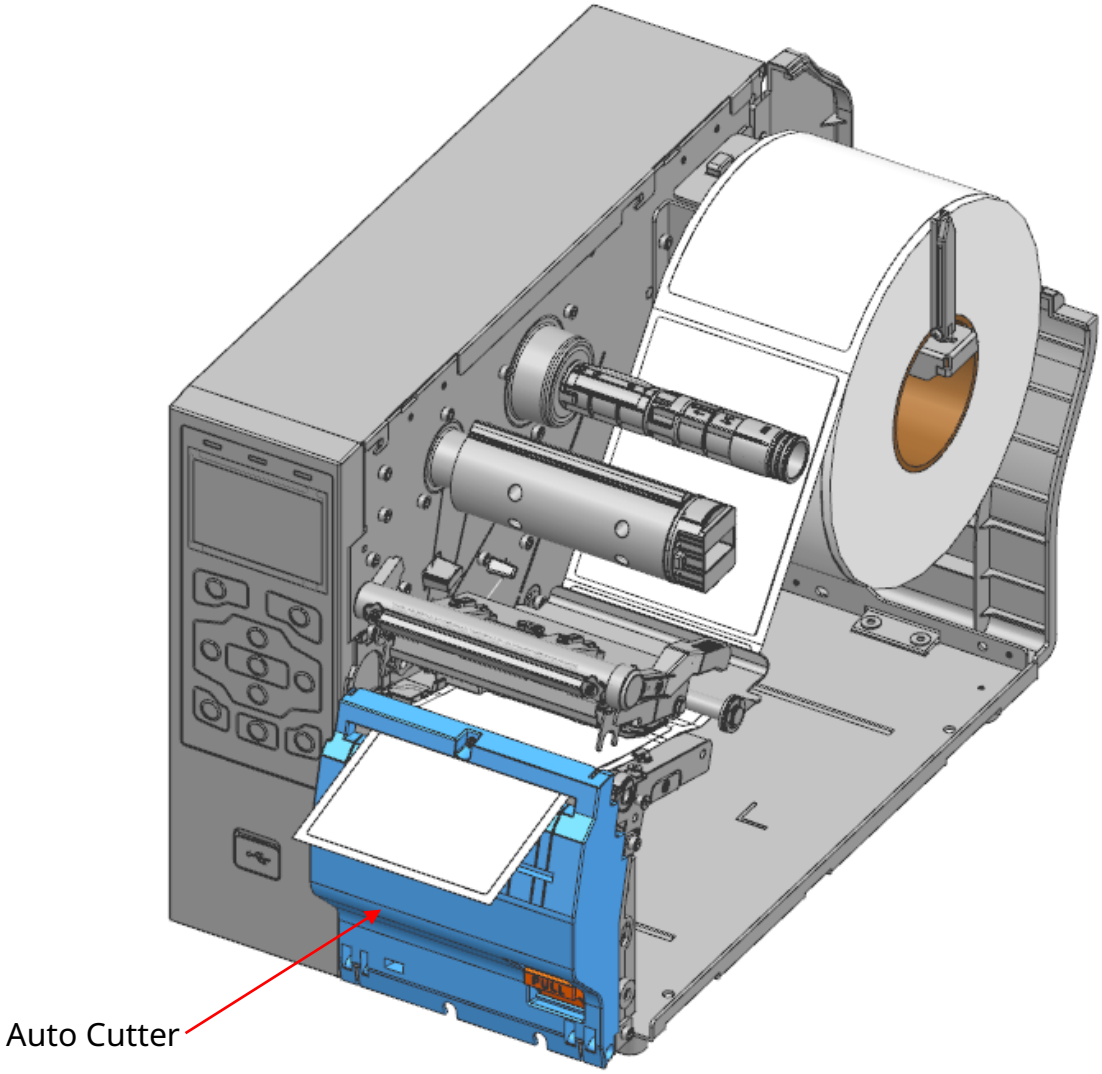

3) Close the print head lever and media cover.

4) If necessary, install the media tray as shown in the picture.
(*The Media tray is not included with the product. Please purchase it separately.)

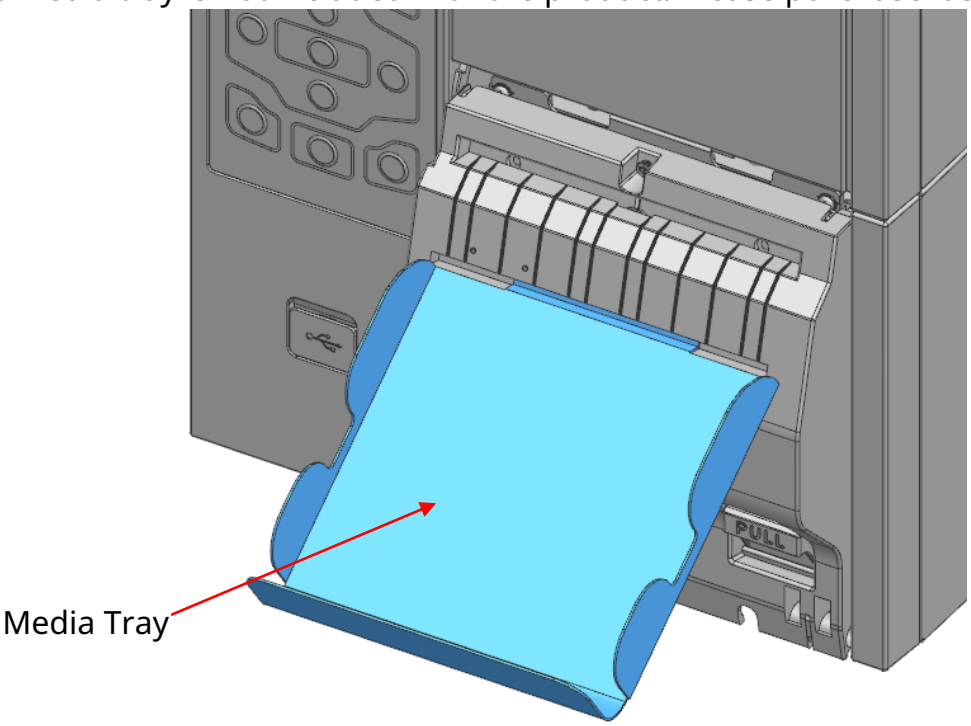

- When opening or closing the cover, be careful not to pinch your fingers.
- Do not open the print head levers while the printer is printing. The printer may be damaged.
- Change the media when the printer is not receiving data, or data May be lost.
- Never insert objects or fingers while performing the cutting function. This can cause serious bodily injury.
- Be careful not to touch the cutter blade with your hand. There may be a risk of personal injury.
- While the printer is operating, the printer head gets very hot, so turn off the power and let it cool down completely. The hot printer head can cause serious burns.

3-4-3 Media Installation Method of Peeler (optional) Model

Use a peeler to automatically separate the printed media from the liner.
When shipped from the factory, the peeler is attached.
For Peeler Model, install media in the following ways:

1) Refer to '3-4-1 Media Installation Method of Standard Model' to install media, adjust media guide and sensor position.

2) Press the left and right peeler levers to open the peeler cover.

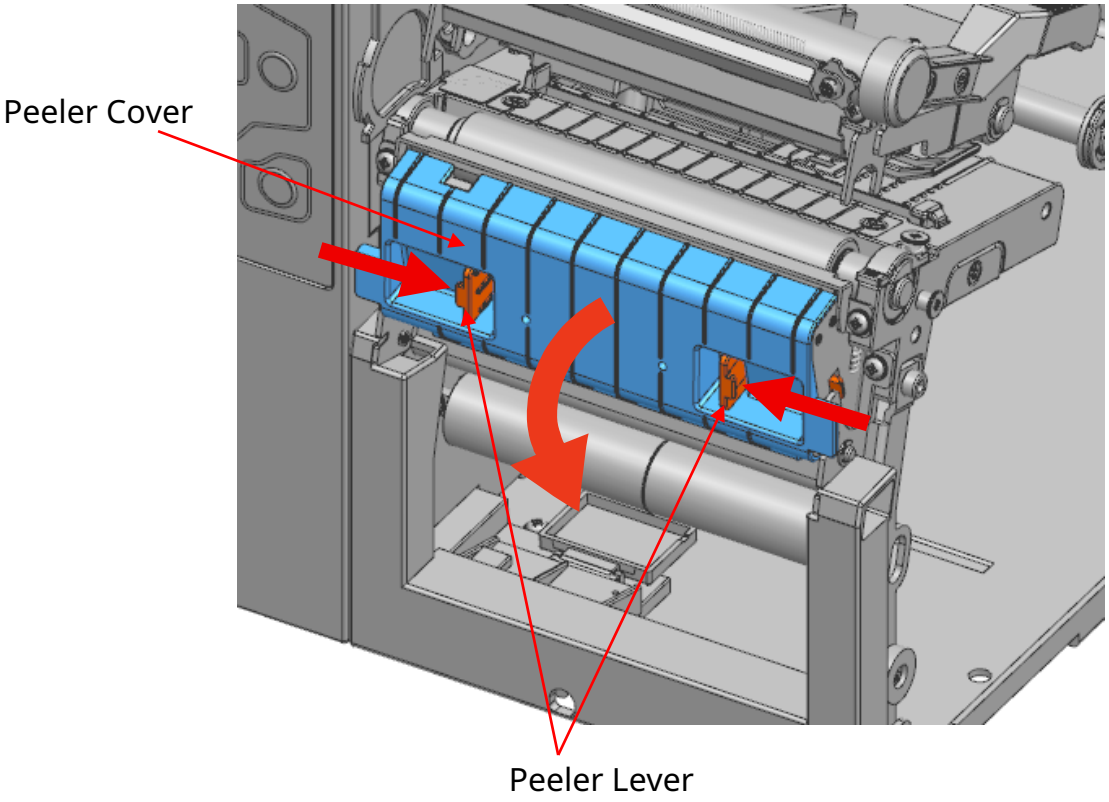

3) Move the peeler switch to ON. Please make sure that the LED has turned on.

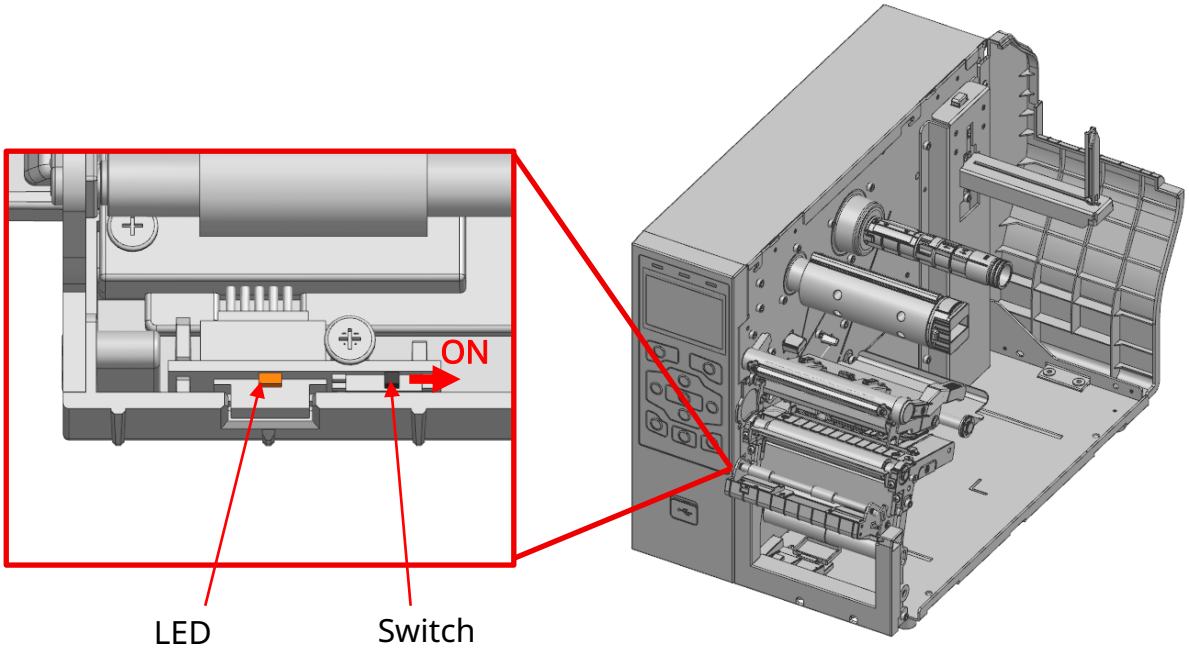

4) Remove several sheets of label media and insert liner as in the picture.

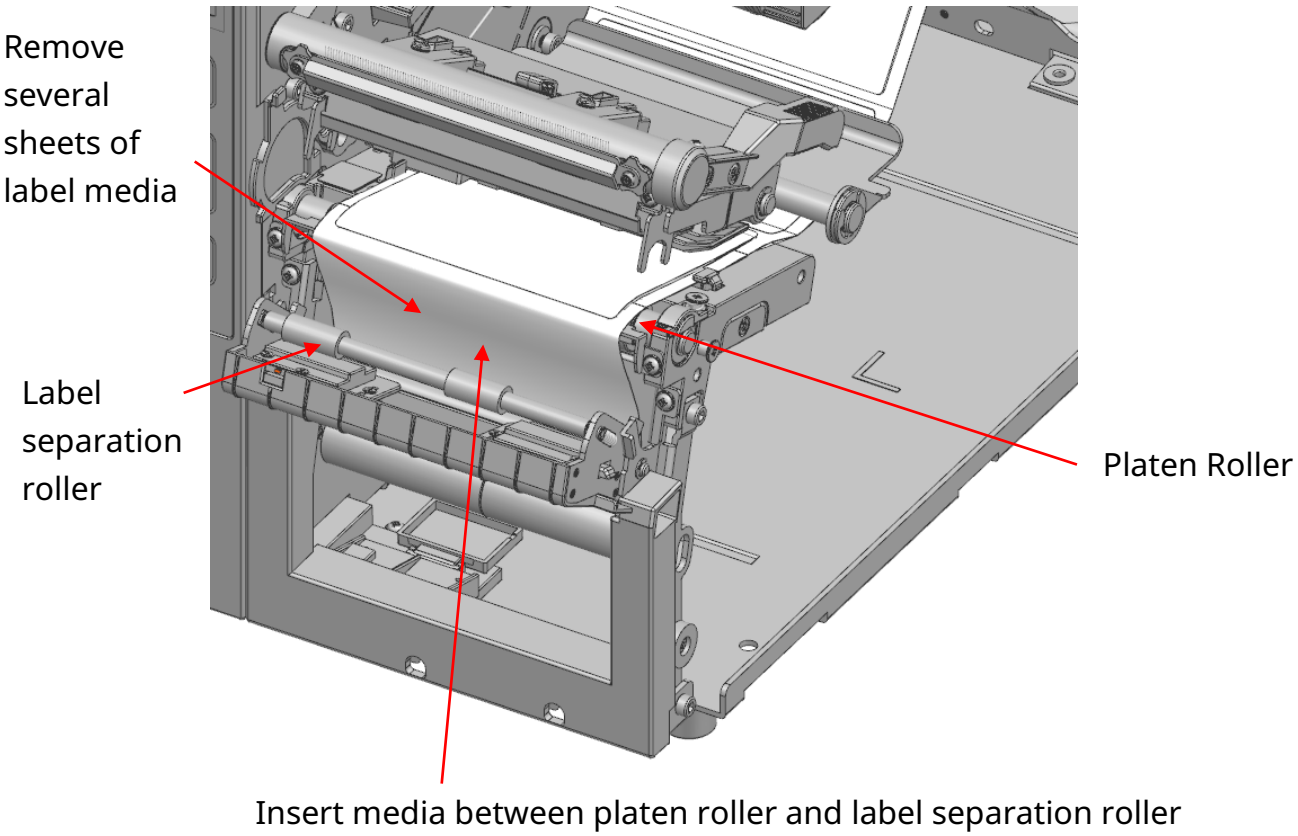

5) Close the peeler cover until it clicks.

(O)

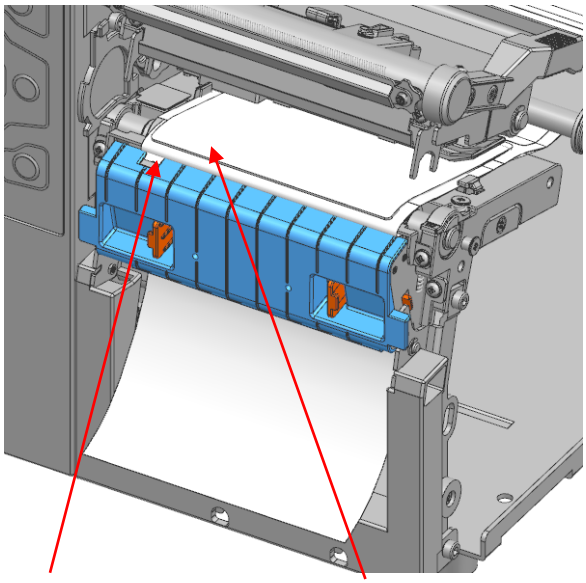

Peeler Sensor

(X)

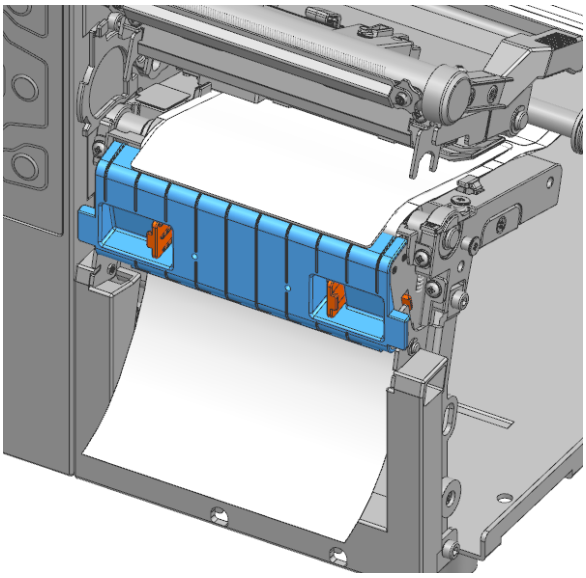

Be careful that the media does not cover the peeler sensor

6) Close the print head lever, the rewinder cover, and the media cover.

- When opening or closing the cover, be careful not to pinch your fingers.
- Do not open the print head levers while the printer is printing. The printer may be damaged.
- Change the media when the printer is not receiving data, or data may be lost.
- The peeler function is only available for label media.
- When the peeler is switched on, the next label will not be printed unless the printed label is removed from the peeler.
- When the peeler is switched off, the peeler does not work.
- While the printer is operating, the print head gets very hot, so turn off the power and let it cool down completely. The hot print head can cause serious burns.

3-4-4 Media Installation Method of Internal Rewinder(optional- Liner Take-up only) Model

Use the internal rewinder to automatically rewind the liner.
For internal rewinder model, install media in the following ways:

•Media Installation Method

1) Refer to '3-4-1 Media Installation Method of Standard Model' to install media, adjust media guide and sensor position.

2) Press the left and right peeler levers to open the peeler cover.

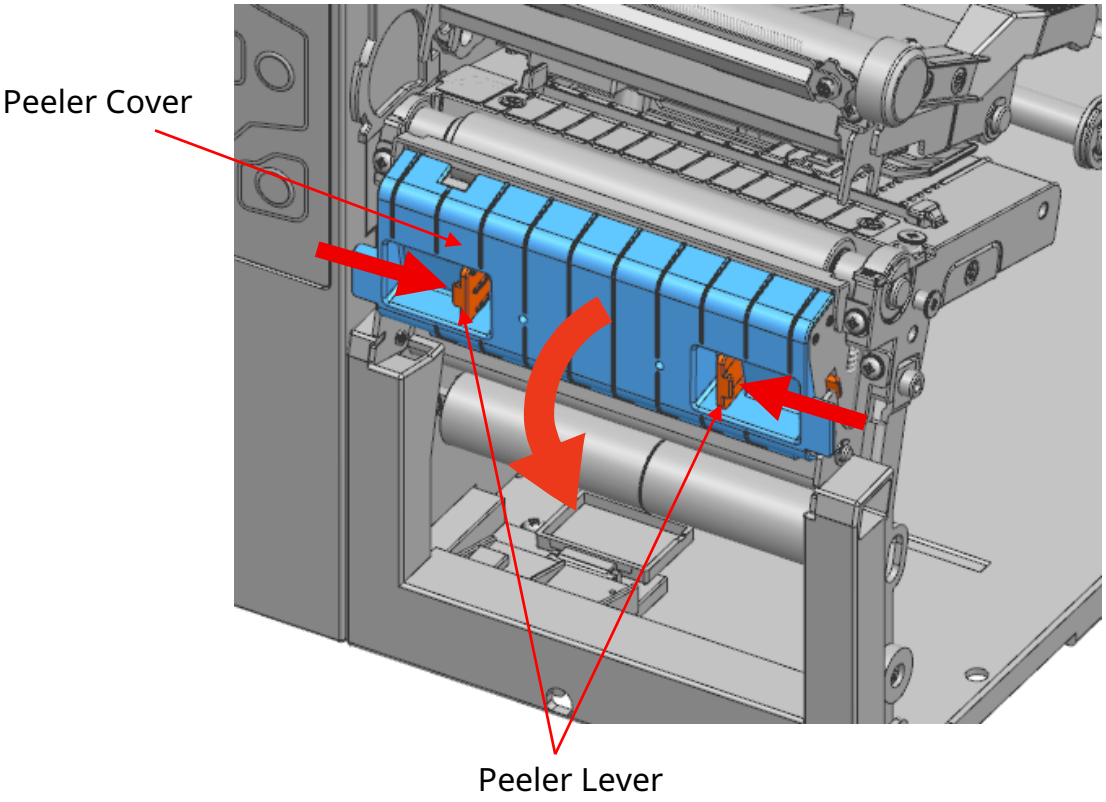

3) Move the peeler switch to ON. Please make sure that the LED has turned on.

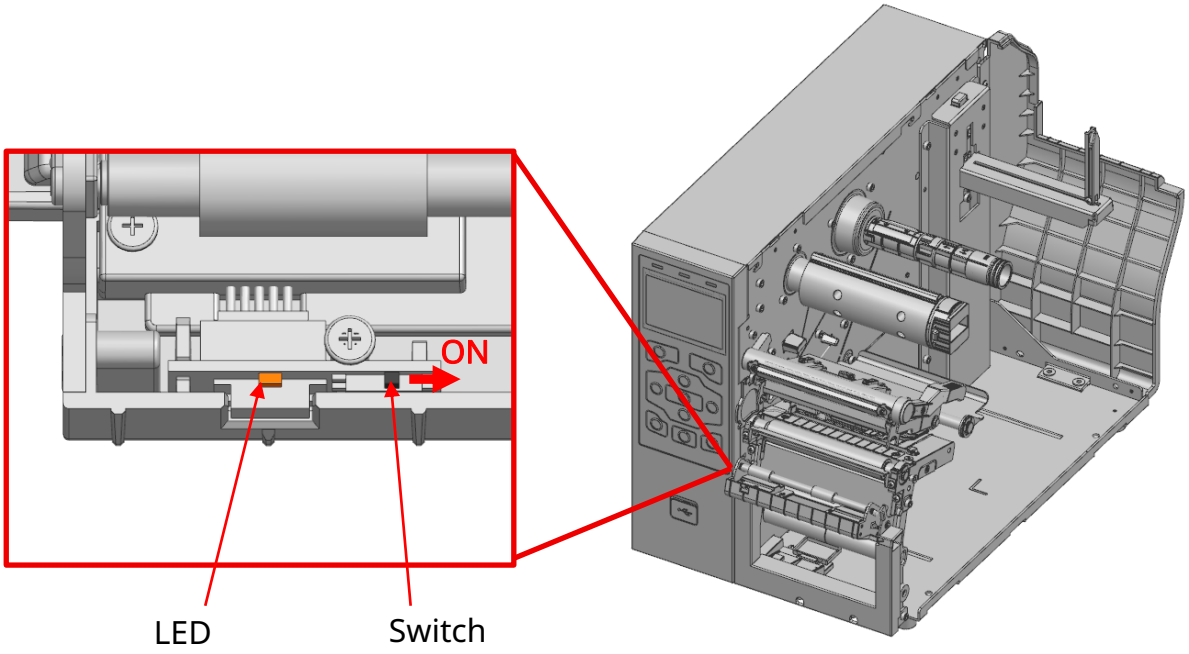

4) Remove several sheets of label media and insert liner as in the picture.

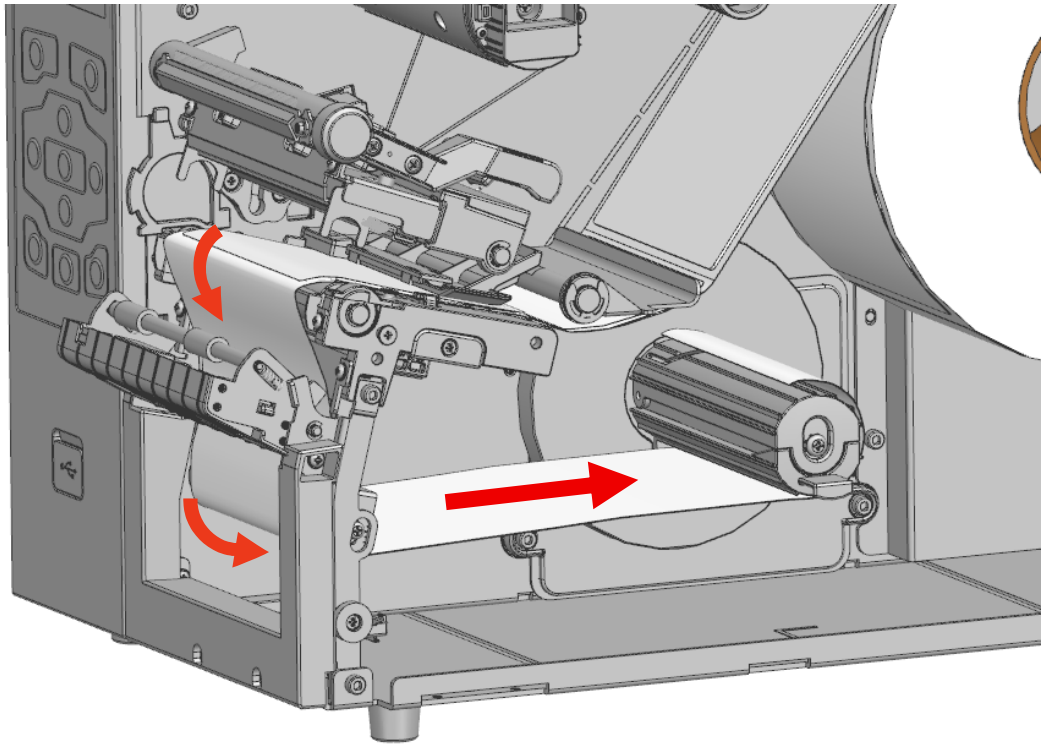

5) After installing the media in the same way as the picture, fix the media on rewinder media guide.

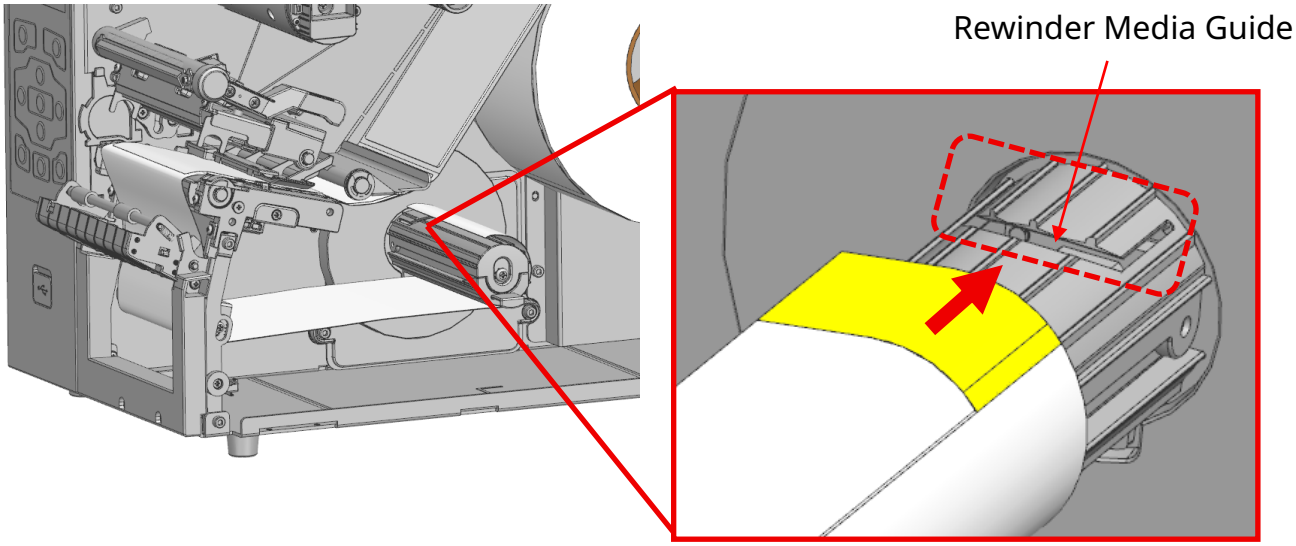

* Insert the paper all the way to the Rewinder media guide

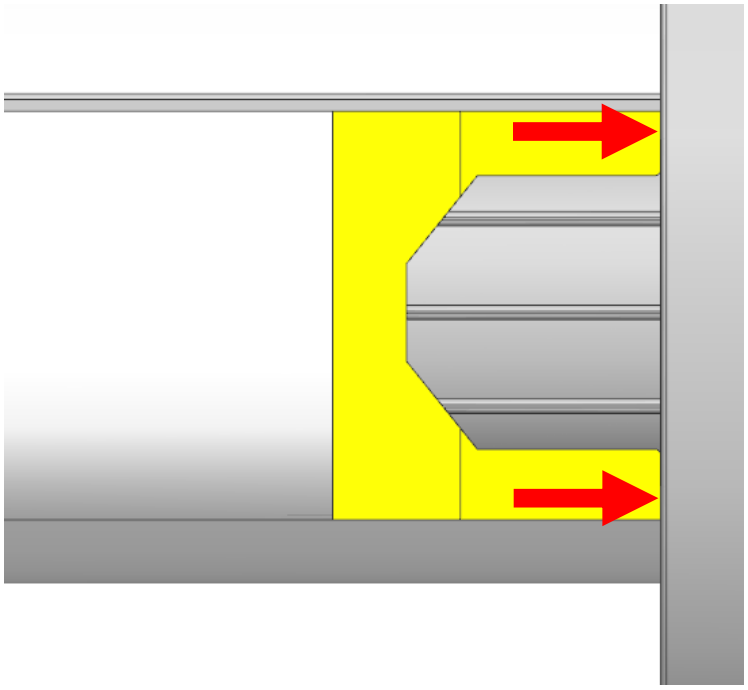

6) Close the peeler cover until it clicks.

(O)

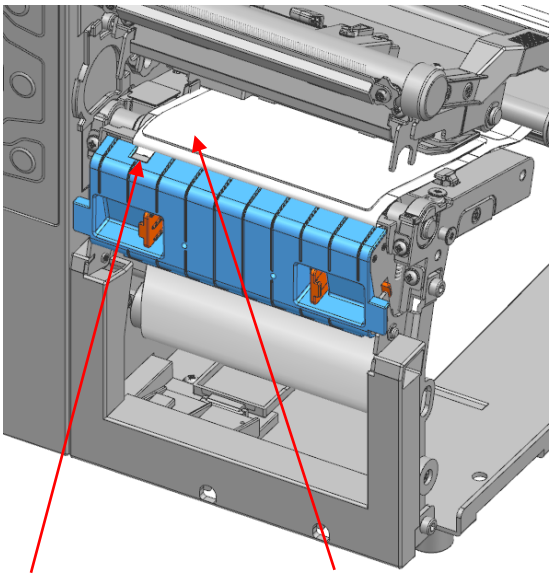

Peeler Sensor

(X)

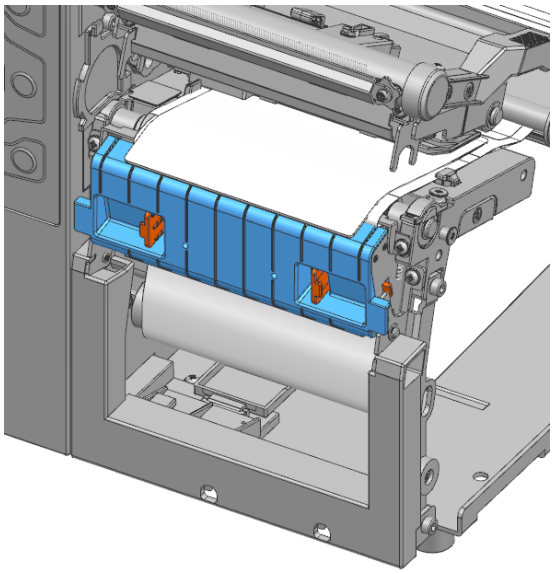

Be careful that the media does not cover the peeler sensor

7) Close the print head lever, the rewinder cover, and the media cover.

• Media Liner Removal Method

1) Open the peeler cover, the media cover and the print head lever.

2) Rotate the rewinder holder counter-clockwise to wind the media liner.

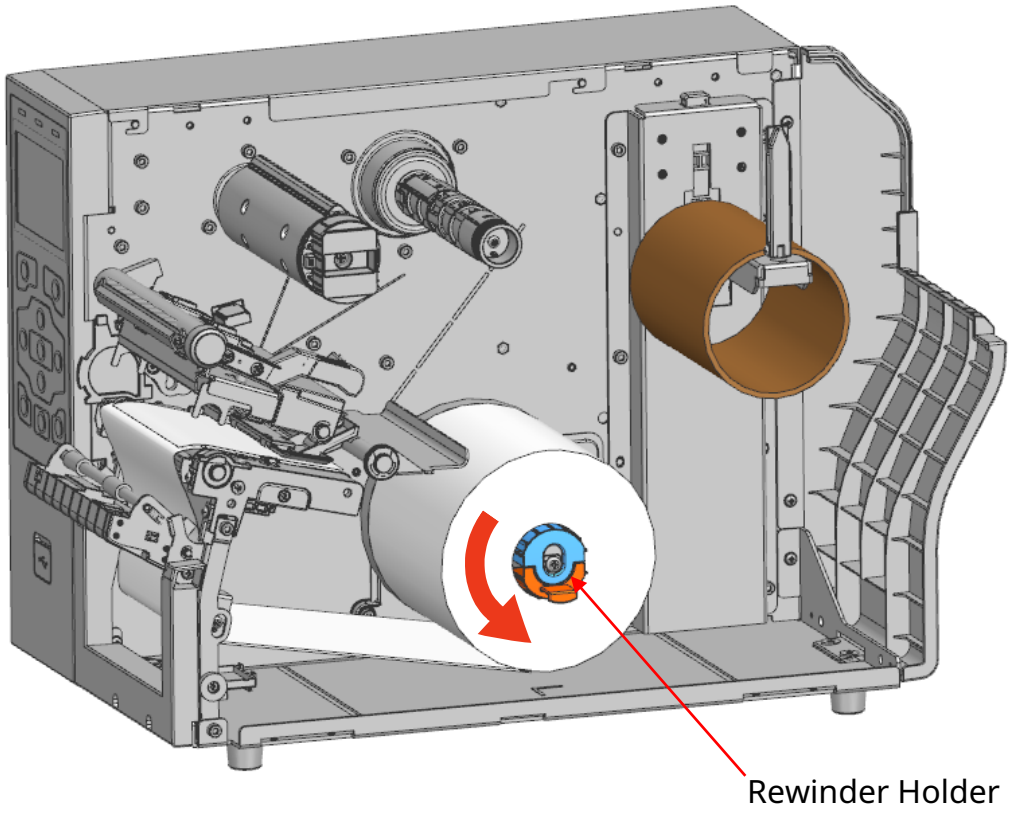

3) Pull the Rewinder Holder Handle and remove installed media liner.

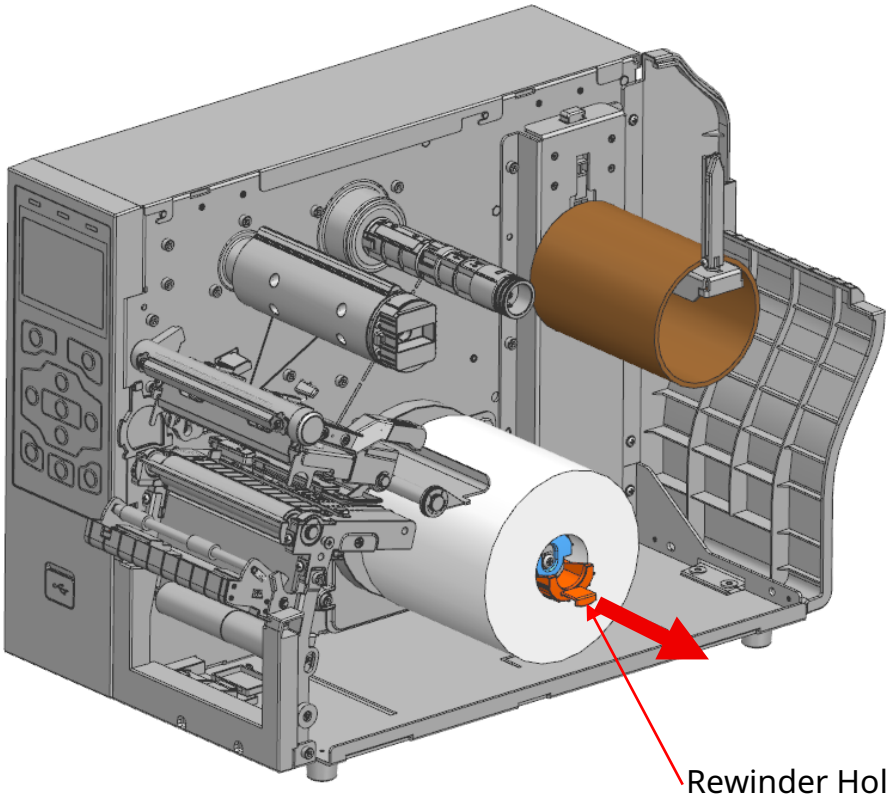

When removing the media, please work to avoid damaging the surrounding parts.

- When opening or closing the cover, be careful not to pinch your fingers.
- Do not open the print head levers while the printer is printing. The printer may be damaged.
- Change the media when the printer is not receiving data, or data May be lost.
- The peeler function is only available for label media.
- When the peeler is switched on, the next label will not be printed unless the printed label is removed from the peeler.
- When the peeler is switched off, the peeler does not work.
- While the printer is operating, the printer head gets very hot, so turn off the power and let it cool down completely. The hot printer head can cause serious burns.

3-4-5 Media Installation Method of External Rewinder(optional) Model

Use the external rewinder to automatically rewind the printed media.
When shipped from the factory, the rewinder is attached.
For Rewinder Model, install media in the following ways:

1) Refer to '3-4-1 Media Installation Method of Standard Model' to install media, adjust media guide and sensor position.

2) Open the rewinder cover.

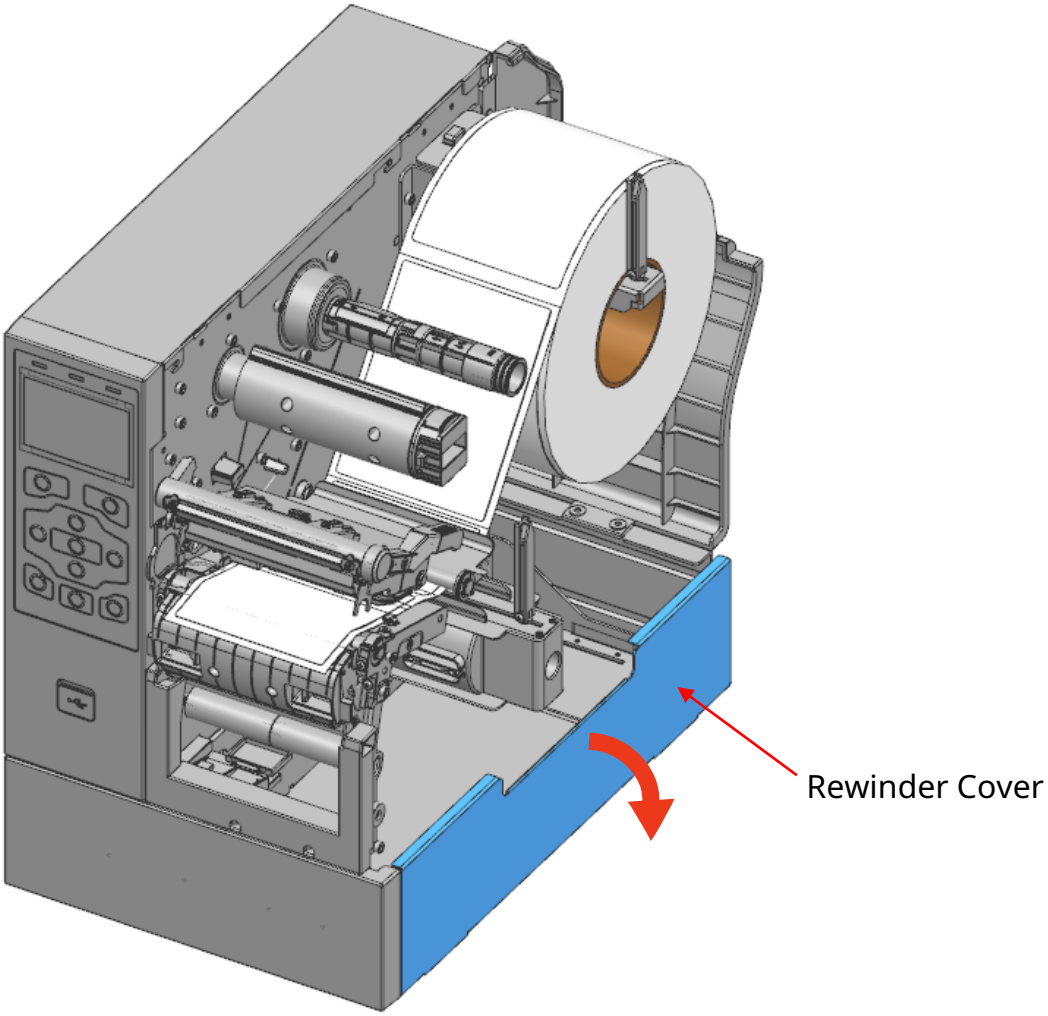

3) After flip down the rewinder fixing guide, install a 3inch media core on the rewinder holder.

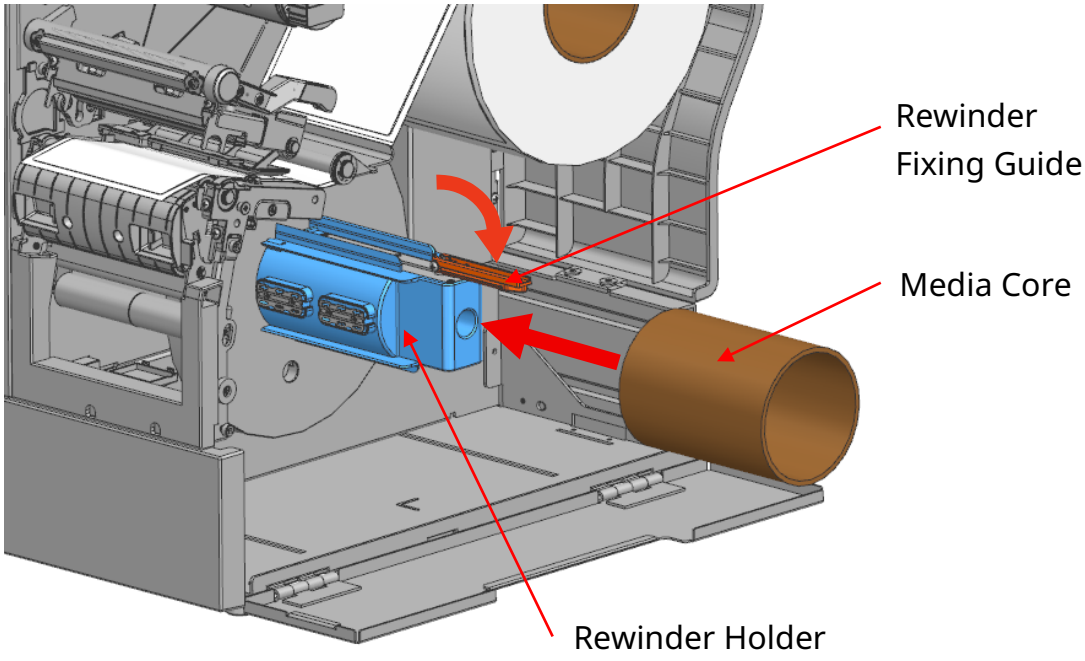

4) After installing the media in the same way as the picture, attach the media to the media core using tape.

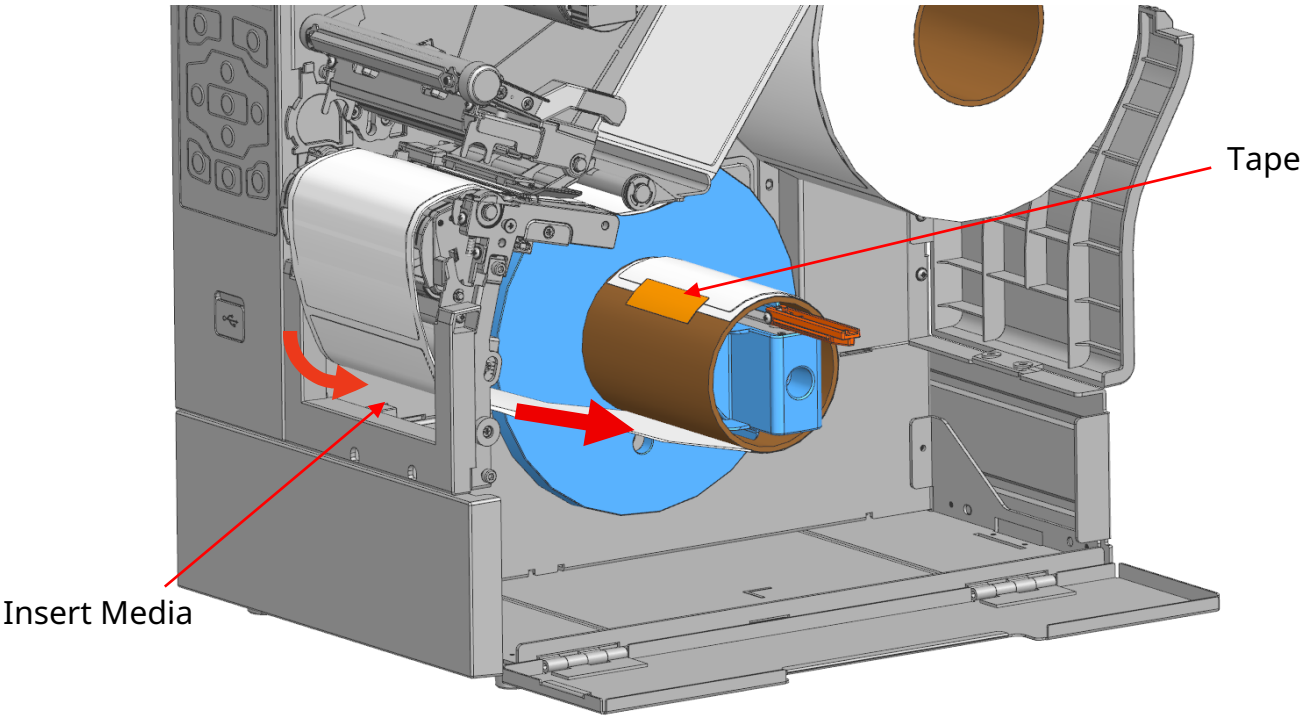

5) After flip up the rewinder fixing guide, push it close to the media.

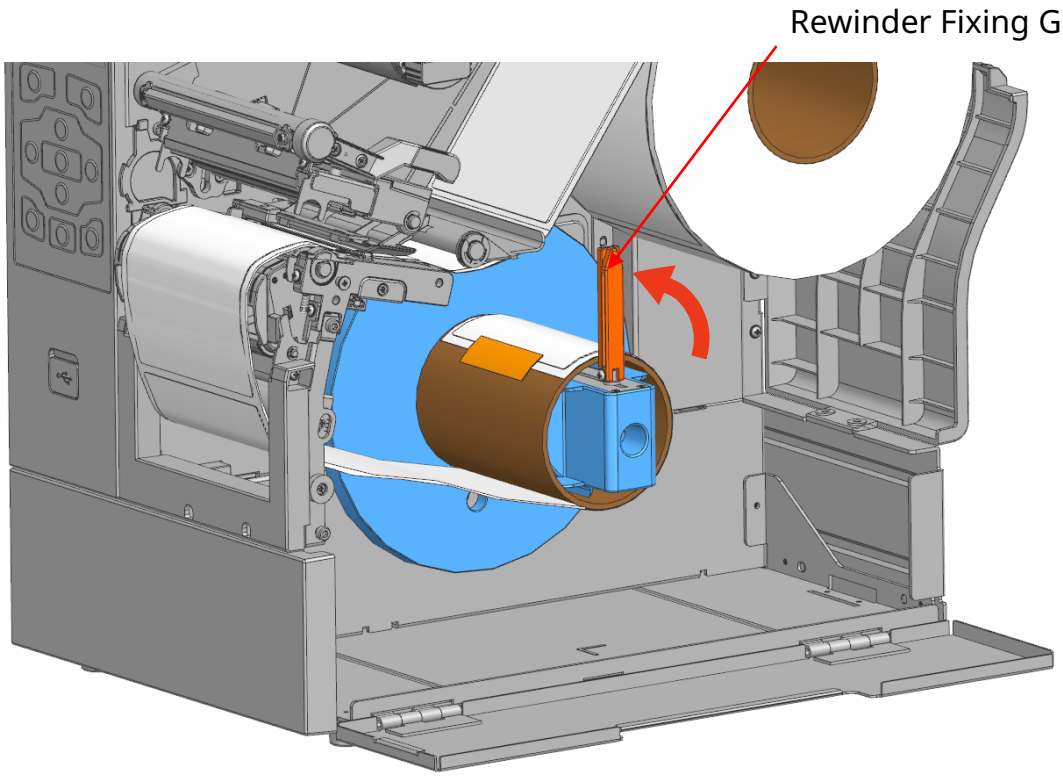

6) Close the print head lever, the rewinder cover, and the media cover.

- When opening or closing the cover, be careful not to pinch your fingers.
- Do not open the print head levers while the printer is printing.
  The printer may be damaged.
- Change the media when the printer is not receiving data, or data may be lost.
- While the printer is operating, the print head gets very hot, so turn off the power and let it cool down completely.
  The hot print head can cause serious burns.

• Rewinder Tension Bar Control Method

If the media being wound on the rewinder is not aligned properly,
slightly loosen the screws fastened to rewinder tension bar using a cross-tip screwdriver to adjust it up and down.

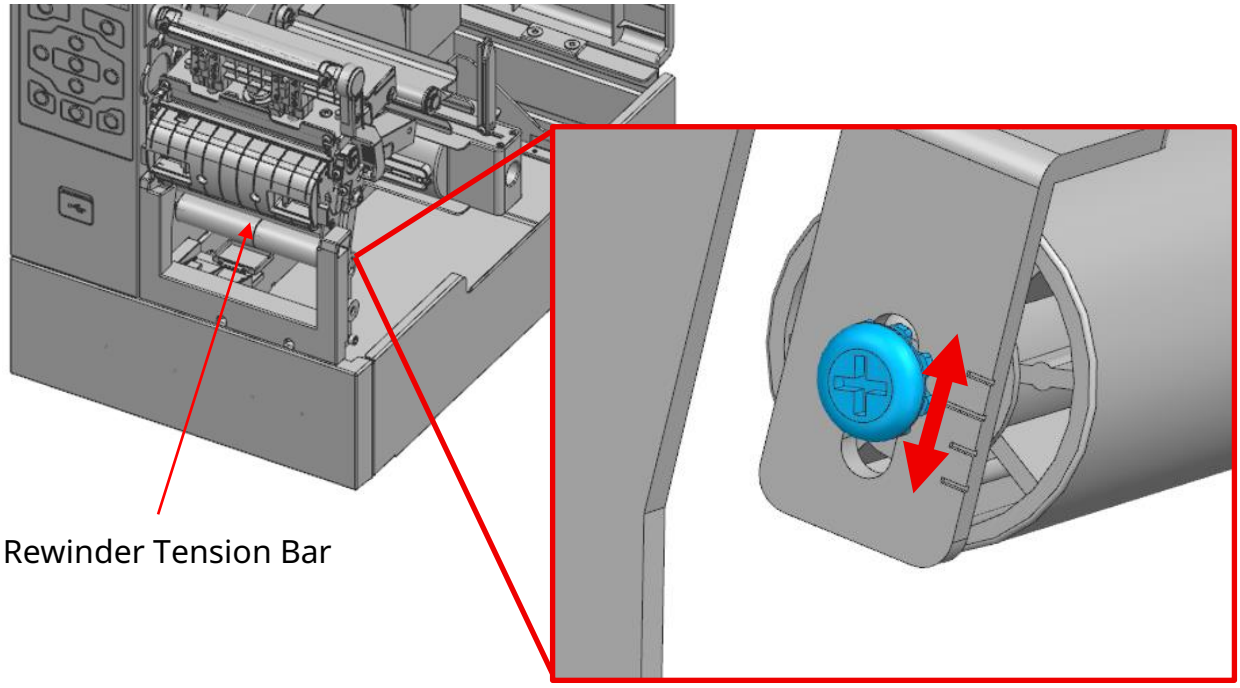

• Media Removal Method

1) Open the media cover, the rewinder cover and the print head lever.

2) Rotate the rewinder media holder counter-clockwise to collect the media.

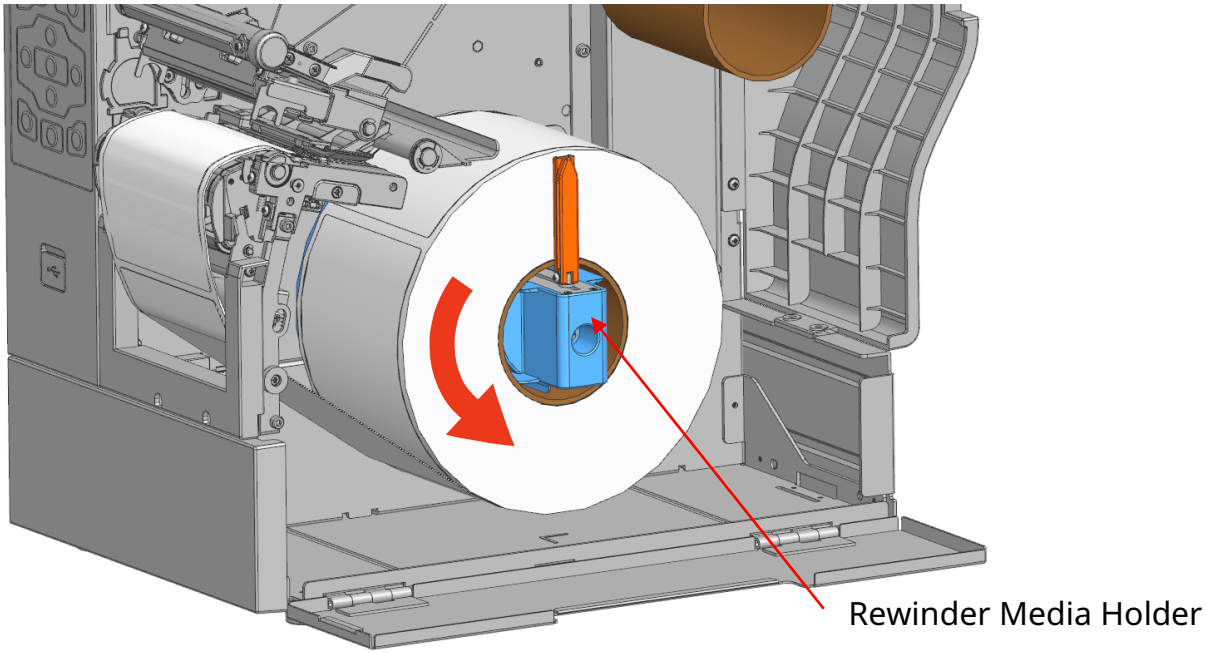

3) After flip down the rewinder fixing guide and remove the media.

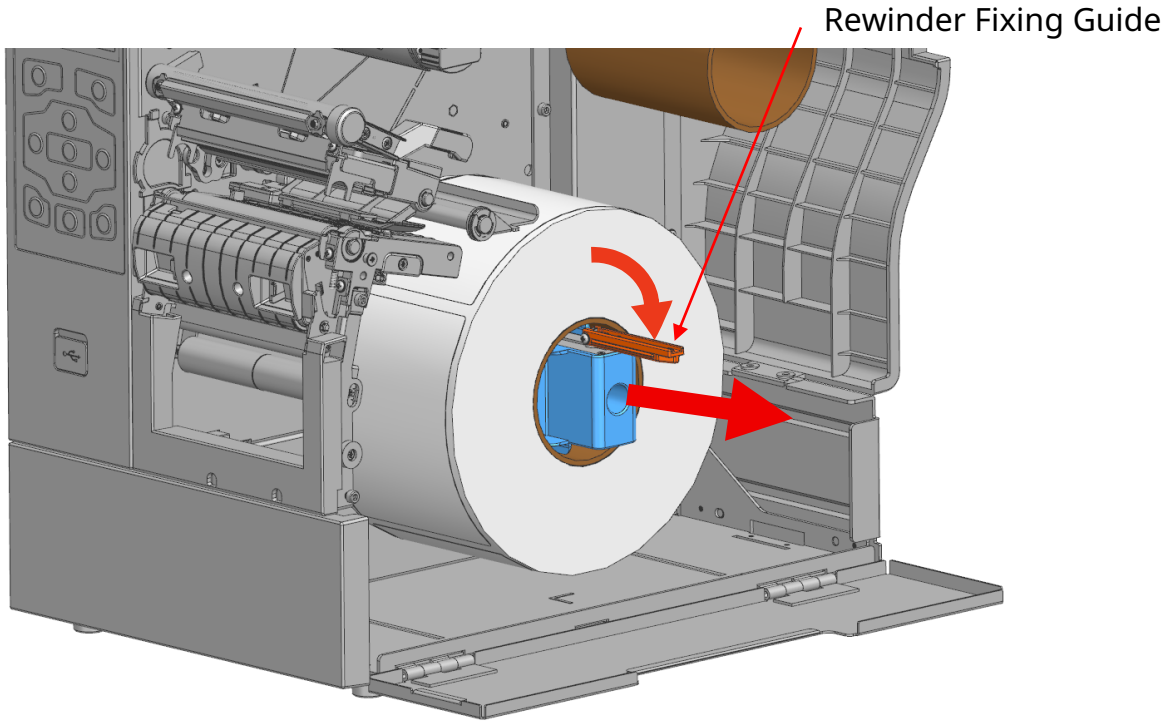

When removing the media, please work to avoid damaging the surrounding parts.

- When opening or closing the cover, be careful not to pinch your fingers.
- Do not open the print head levers while the printer is printing. The printer may be damaged.
- Change the media when the printer is not receiving data, or data may be lost.
- While the printer is operating, the print head gets very hot, so turn off the power and let it cool down completely. The hot print head can cause serious burns.

3-4-6 Media Installation method for 1.5inch Media Core Model

For 1.5inch Media Core Model, install media in the following ways:

1) After folding the media fixing guide down, remove the six hexagonal bolts with a hexagonal wrench(3mm) to separate the bracket guide from the printer.

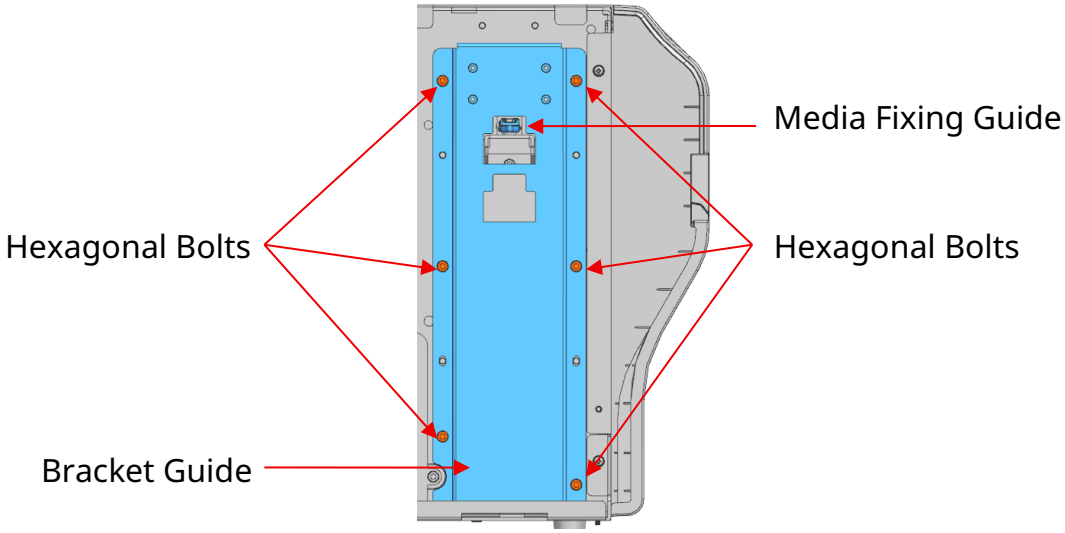

2) Remove the five hexagonal bolts with a hexagonal wrench(3mm) to separate the media holder from the printer, then reassemble by changing the position downward as shown in the figure below.

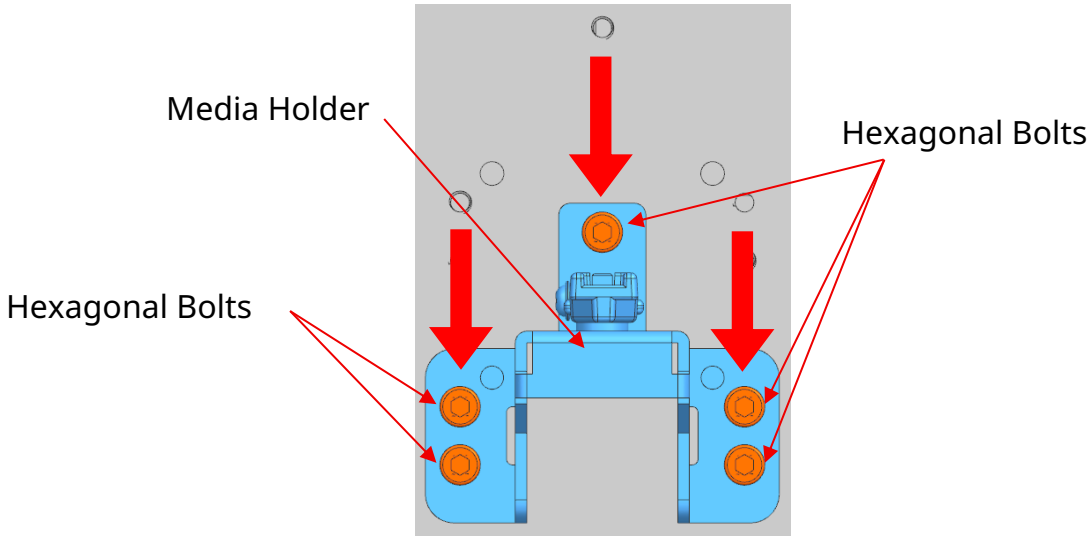

3) Reassemble the bracket guide as shown below.

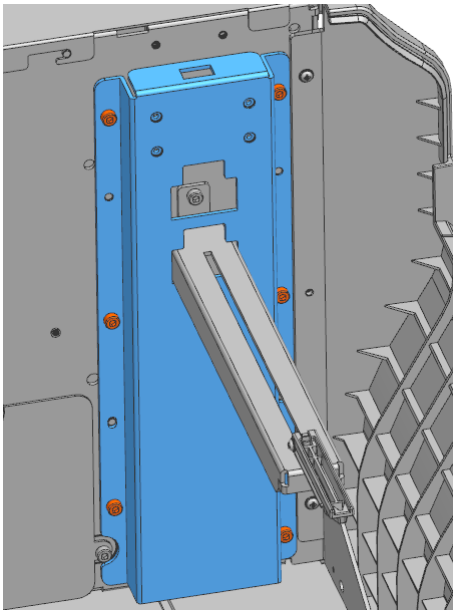

4) Install the media in the same manner as the 3 inch core paper model.

1 inch media holder fixture can be purchased separately.
Please contact the place of purchase.

Be sure to turn off the printer before replacing the media holder.
The printer may be damaged.

3-4-7 How To Install Media Externally

Install media from outside the printer as follows.

1) Insert the media through the rear access slot of the printer.

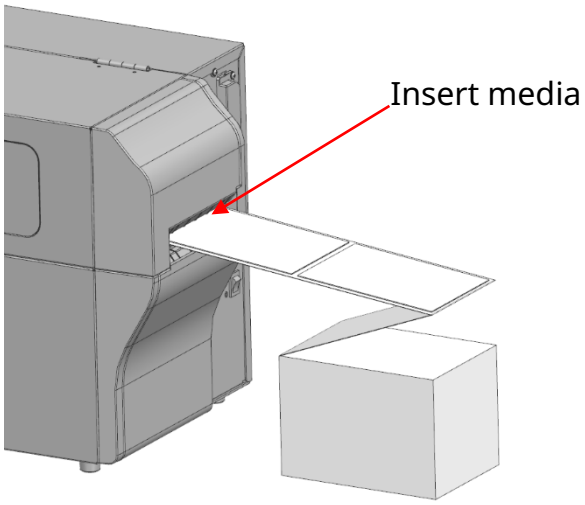

2) Adjust the media fixing guide to the media width.

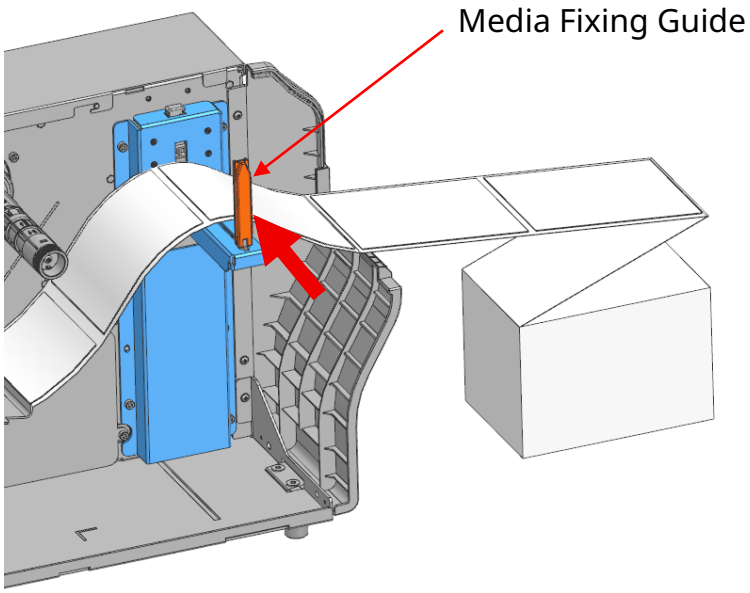

3) Close the print head lever and media cover.

- Do not open the print head levers while the printer is printing. The printer may be damaged.
- Change the media when the printer is not receiving data, or data may be lost.

3-5 How to Use Media Damper (Standard Model)

You can use the media damper to avoid the issue shown in the following images.
- label stuck to the ribbon guide
- folded label end when printing

1) Push the media damper button down to lift the media damper.

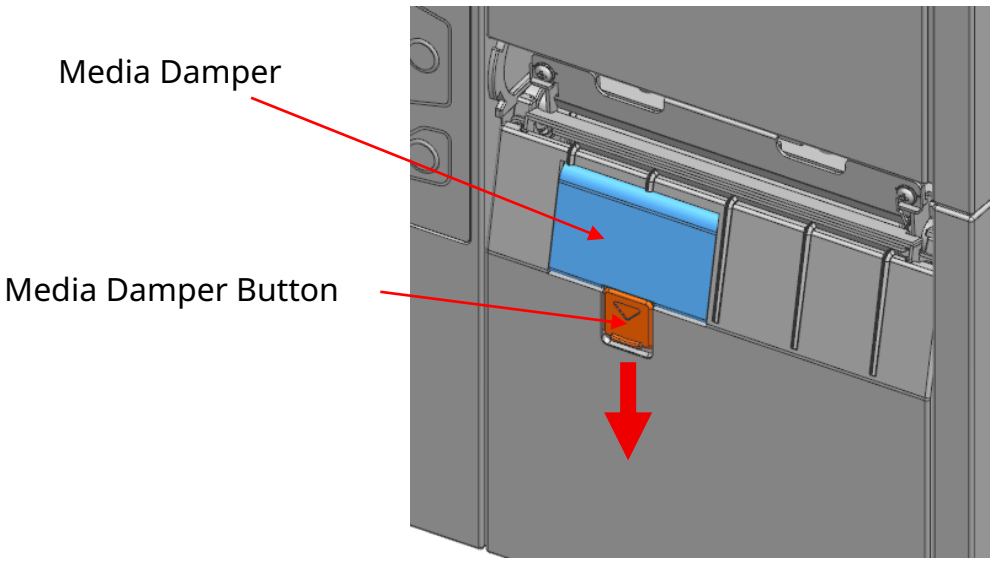

2) Use the printer with the media damper up as in the picture.
(Please refer to 3-4-1 Media Installation Method of Standard Model)

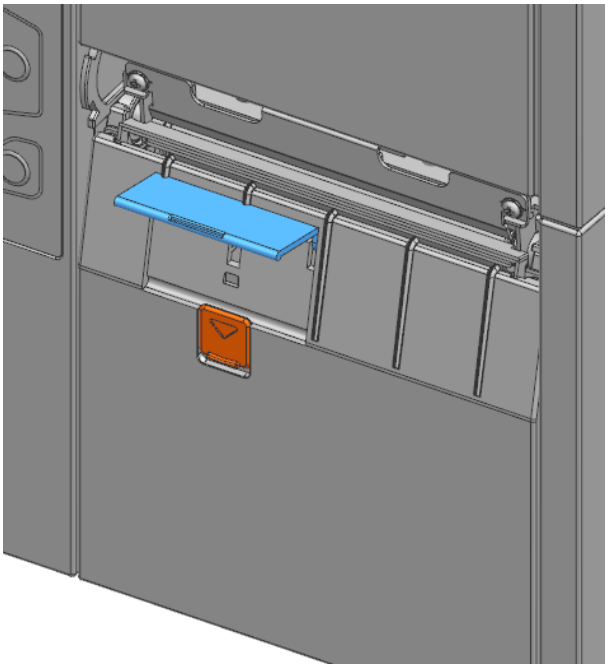

3-6 Ribbon Installation

3-6-1 Ribbon Type

1) Type by film coating position
- This printer can be used with both Outside and Inside Ribbon.

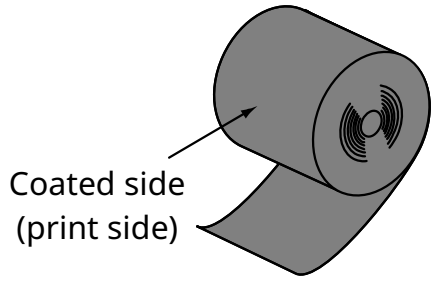

Outside Ribbon

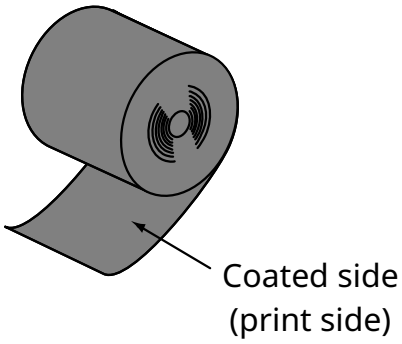

Inside Ribbon

Perform an adhesion test to determine which side of the ribbon is coated.
Follow these steps to check the coated side of the ribbon.
1) Remove the label from the liner.
2) Press one corner of the adhesive side of the label against the outside/inside of the surface of the ribbon.
3) Remove the label from the ribbon.
4) Check whether the black ink ribbon appears on the adhesive side of the label.

Do not dispose of the ribbon core of spent ribbon because it will be reused.
The hot printer head can cause serious burns.

2) Type by Ribbon core
- This printer can be used only with the ribbon of 1 inch ribbon core.

3-6-2 Ribbon Installation Method

Install ribbon as follows.
1) Insert the ribbon into the ribbon supply spindle.

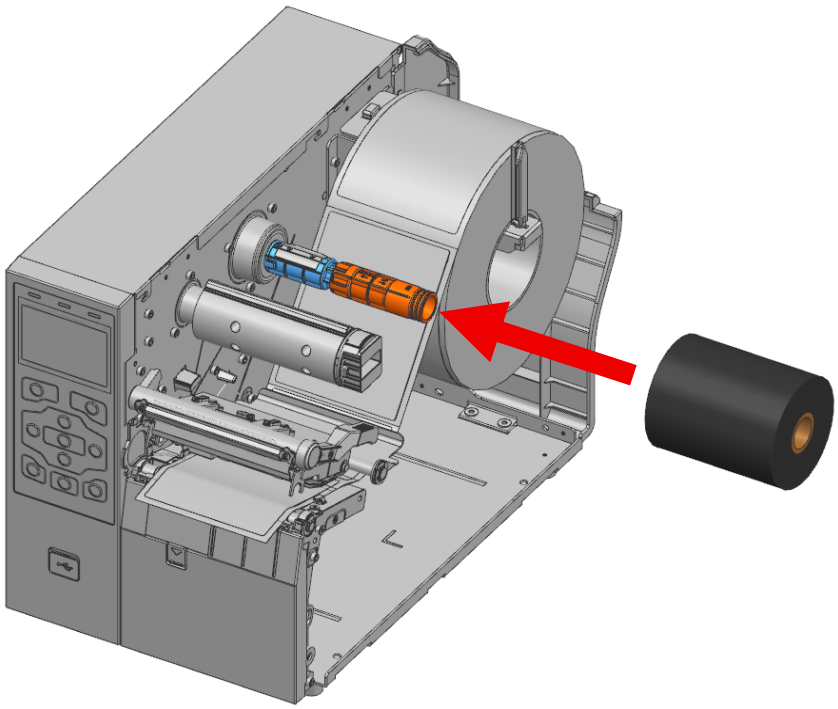

2) Open the print head lever and install the ribbon as shown below.

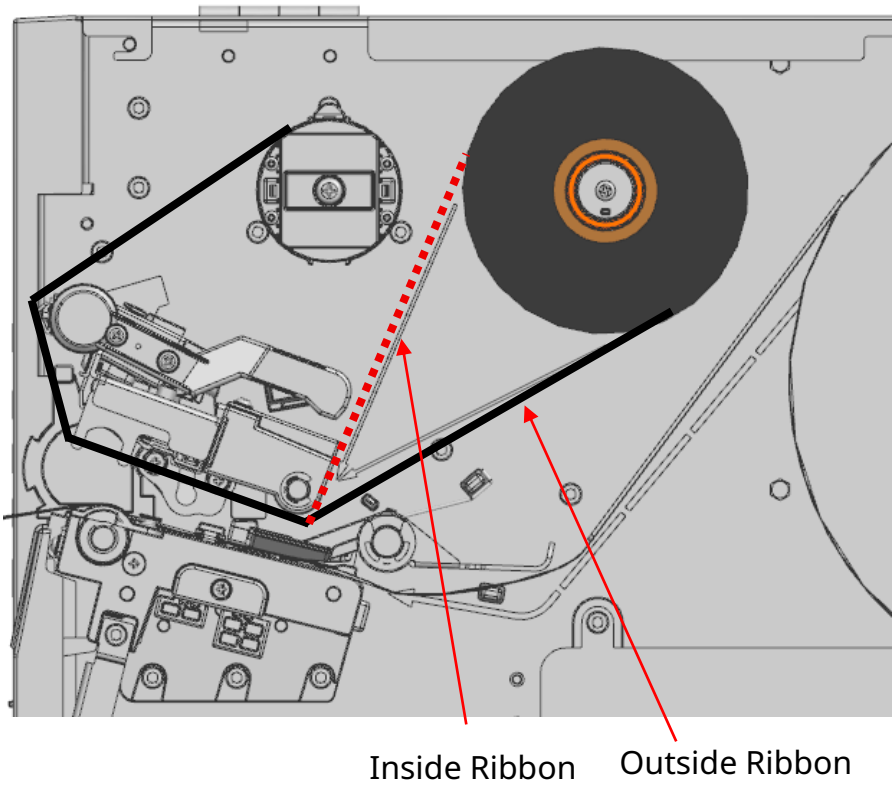

3) Rotate the ribbon take-up spindle to wind the ribbon.

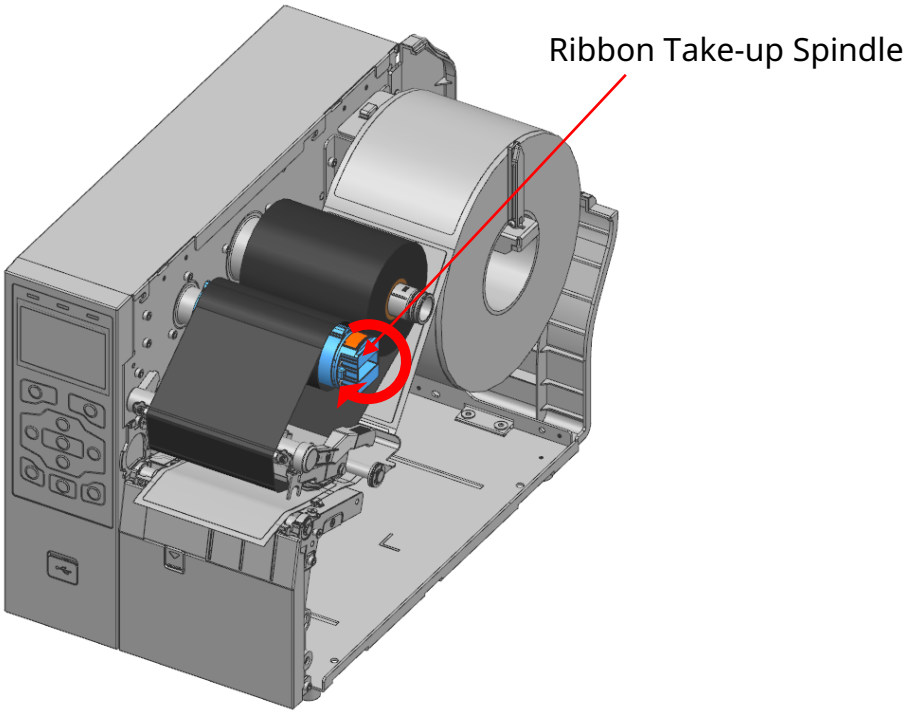

4) Close the print head lever and the media cover.

- When opening or closing the cover, be careful not to pinch your fingers.
- Do not open the print head levers while the printer is printing. The printer may be damaged.
- Change the media when the printer is not receiving data, or data may be lost.
- While the printer is operating, the printer head gets very hot, so turn off the power and let it cool down completely. The hot printer head can cause serious burns.

3-6-3 Load Adjustment by Ribbon Length

The printer can use all 1 to 4 inch wide ribbons and is set to 4 inch wide ribbons when shipped from the factory. Adjust the ribbon supply spindle load according to the ribbon width.

1) When using ribbon of 3 inch or 4 inch width, pull in the direction of UP marked on the ribbon supply spindle until it clicks.

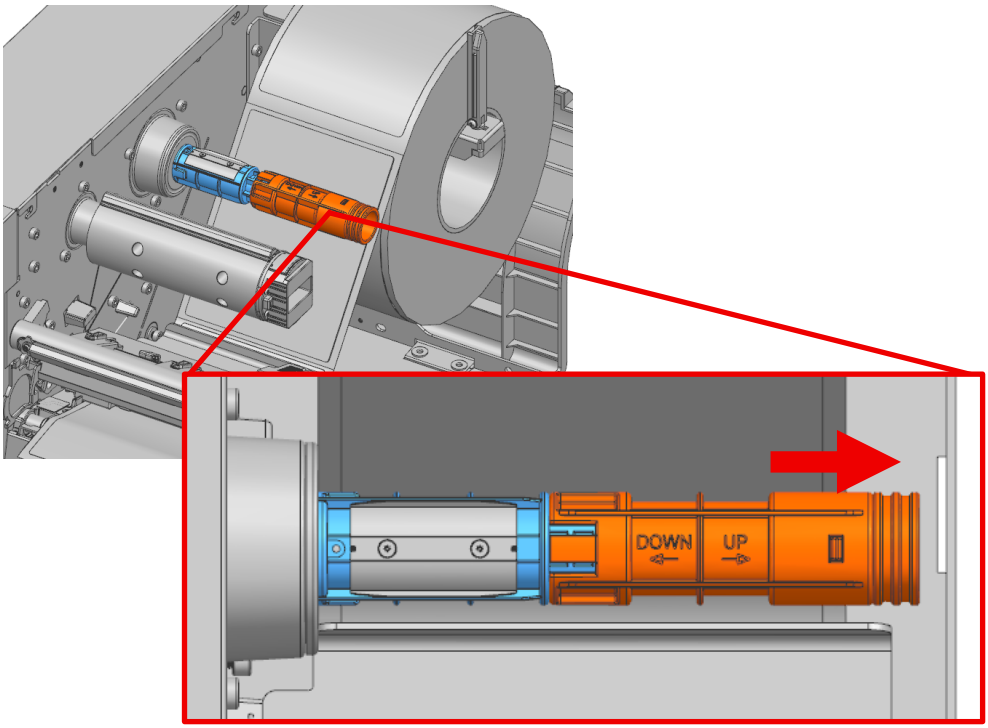

2) When using ribbon of 1 inch or 2 inch width, push in the direction of DOWN marked on the ribbon supply spindle until it clicks.

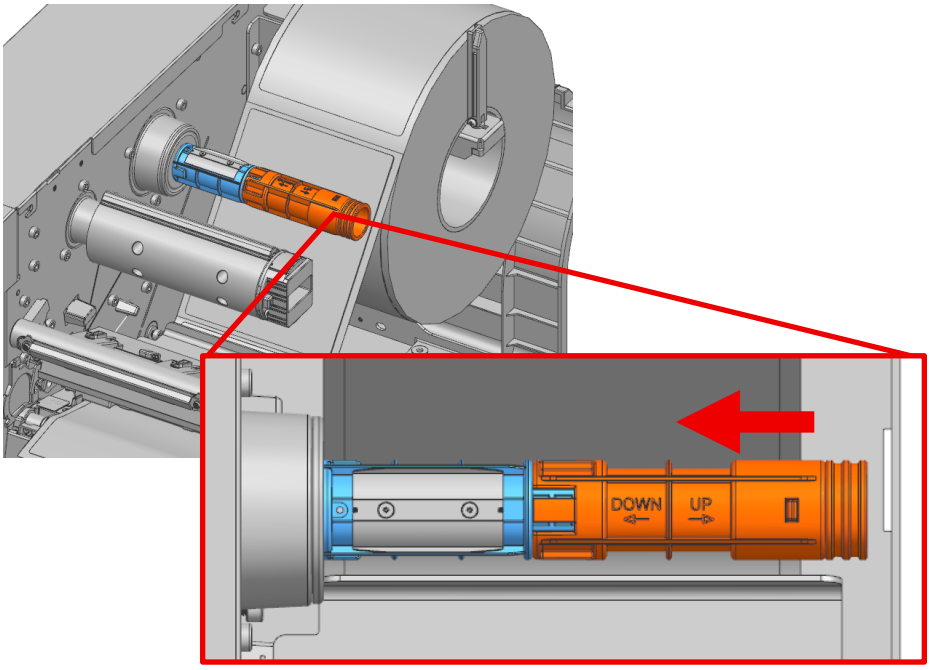

Depending on the type of media and ribbon, you may need to use the ribbon supply spindle in the marked UP direction, even when using a ribbon that is 2 inches or less in width.

Do not adjust the ribbon supply spindle load while the printer is printing. The printer may be damaged.

3-6-4 Ribbon Remove Method

Remove the ribbons as follows.

1) Open the print head lever.
2) Cut the Ribbon and press both buttons on the ribbon take-up spindle.

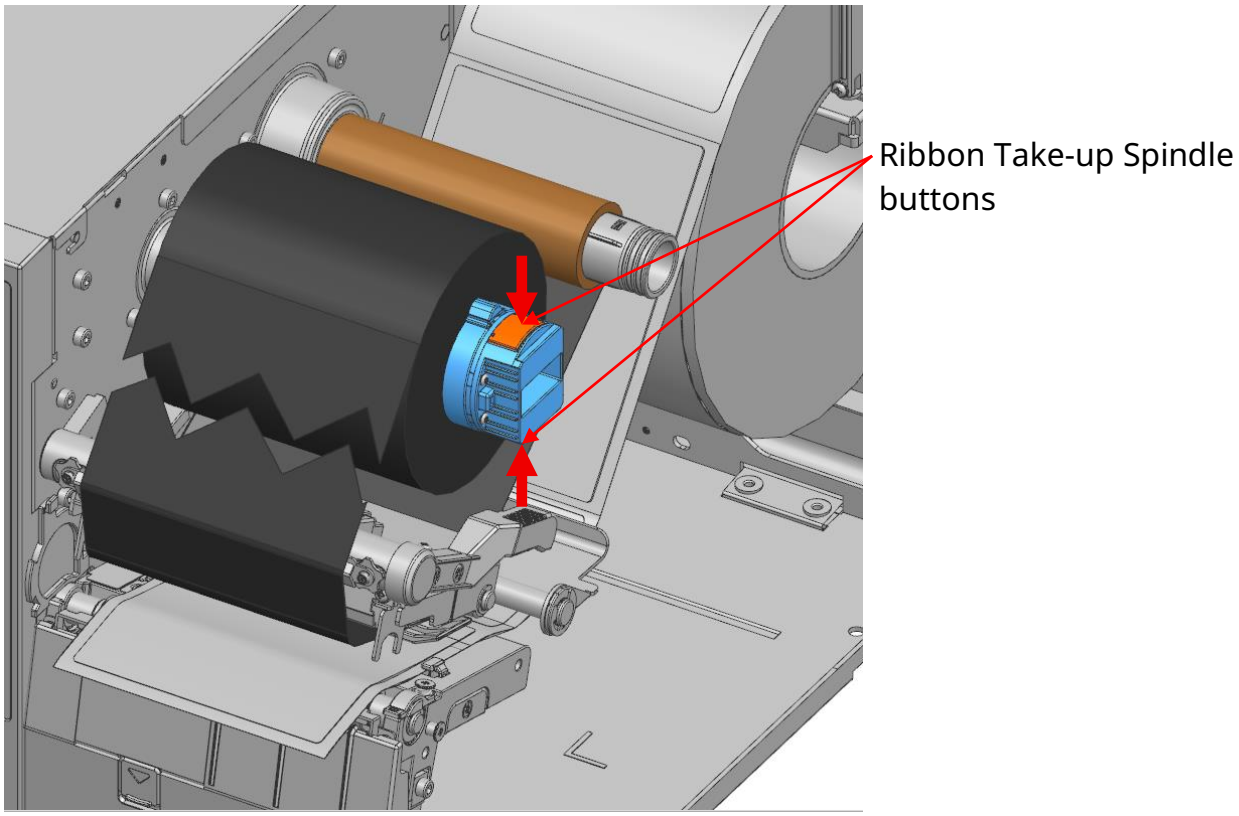

3) Remove the ribbon and ribbon core to outside.

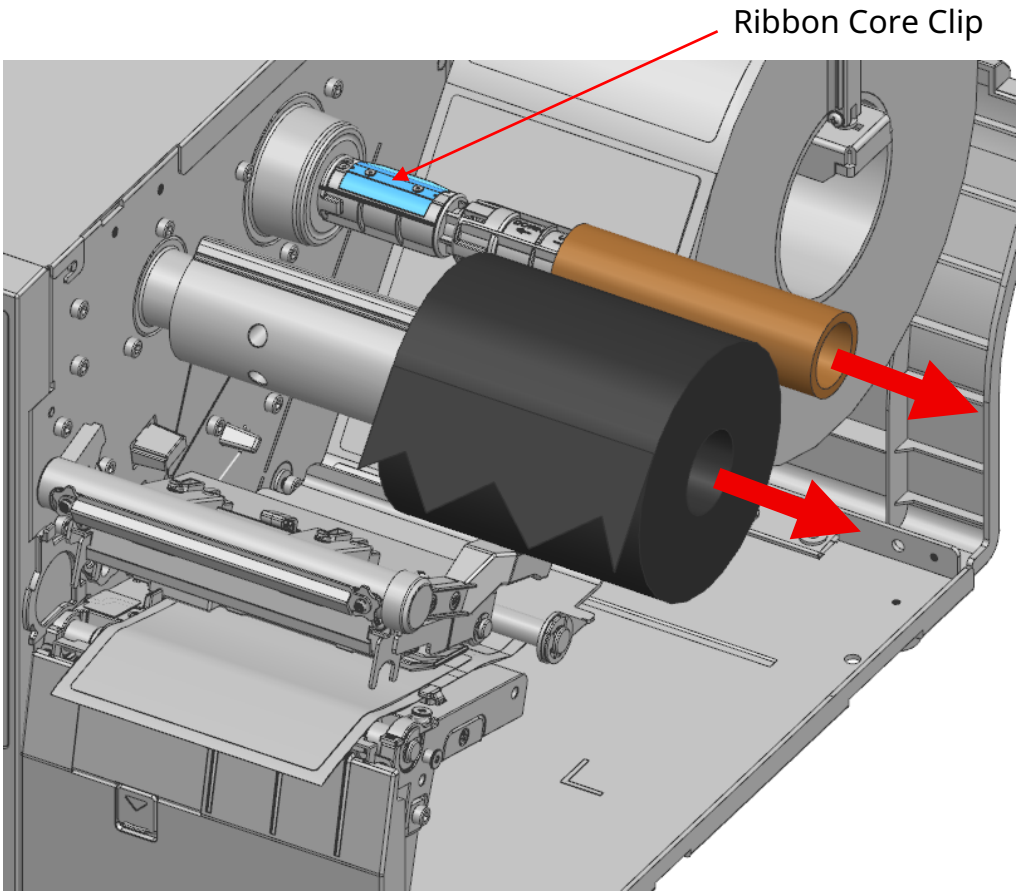

- Don't remove the ribbon and ribbon core while the printer is printing. The printer may be damaged.
- When removing ribbon and ribbon core, be careful of the sharp end of the ribbon core clip. This can cause serious bodily injury.

3-7 Print Head Load Control Method

• Adjust the print head load by turning the knobs depending on the media width and thickness. When the printer ships from the factory, the left and right knobs are set to level 3.
Adjusting the print head load can improve the print quality.

※ Turning the knob toward the level 1 (counterclockwise) direction reduces the print head load and the print density.
Turning the knob toward level 5 (clockwise) increases the print head load and the print density.

1) Default knob settings : Left 3, Right 3

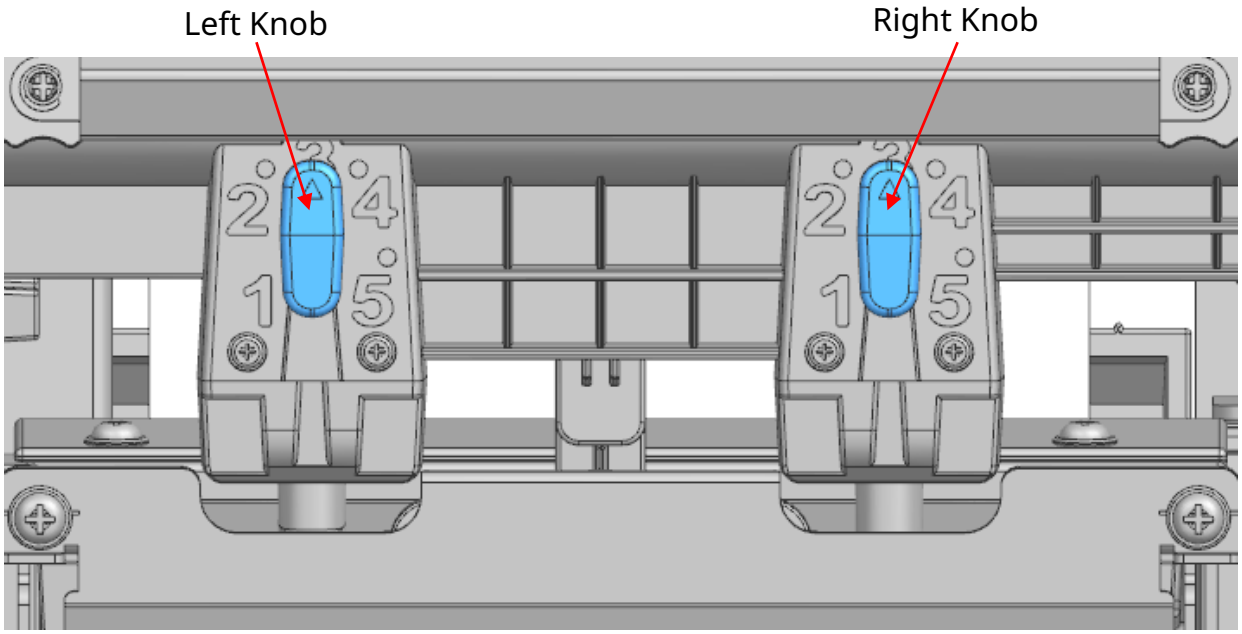

Do not adjust knobs while the printer is printing.
The printer may be damaged.

3-8 Ribbon Guide Control Method

• Wrinkles can be improved by adjusting A and B on the ribbon guides.

1) How to adjust ribbon guide A
- Adjust the forward and backward by turning the left and right knobs of ribbon guide A.

Media Printing Status	Adjustment Method
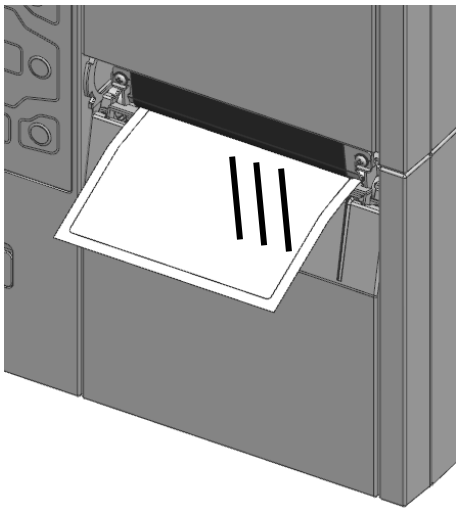 Wrinkles on the Right	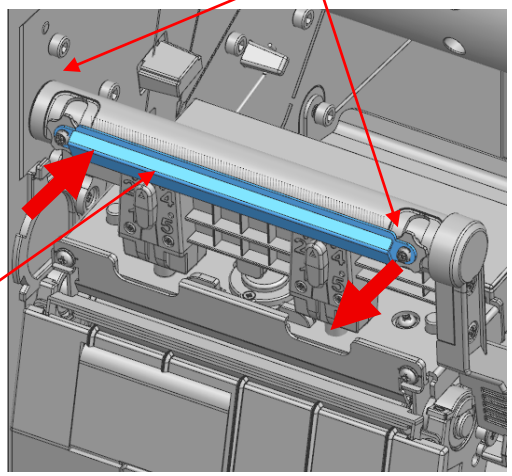 1) Slightly loosen the knob on the right side. 2) Slightly fasten the knob on the left side.
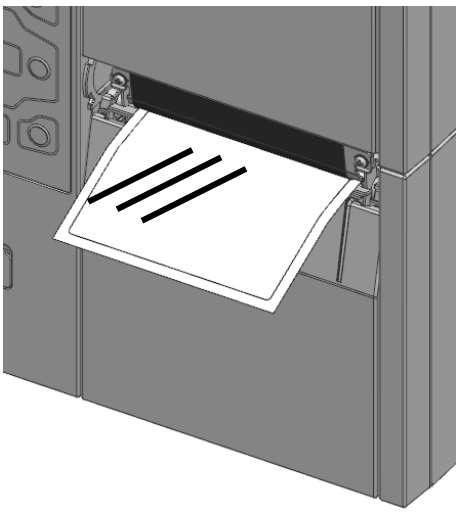 Wrinkles on the Left	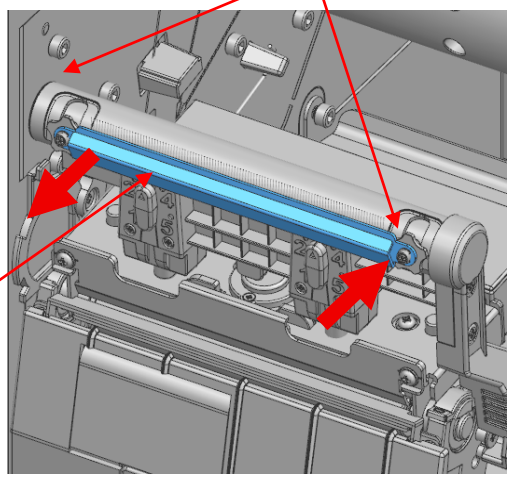 1) Slightly fasten the knob on the right side. 2) Slightly loosen the knob on the left side.

2) How to adjust ribbon guide B
- Slightly loosen the screws fastened to the ribbon guide B using a cross-tip screwdriver to adjust it up and down.

Media Printing Status	Adjustment Method
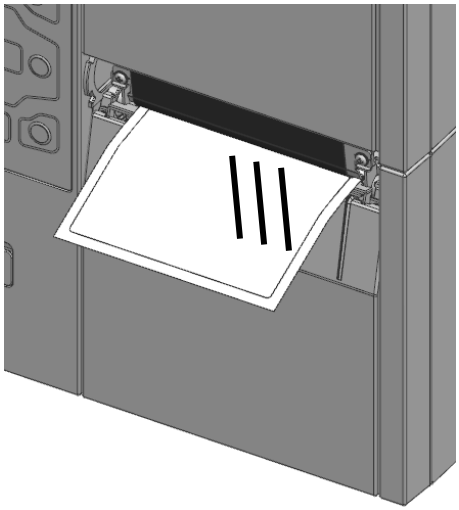 Wrinkles on the Right	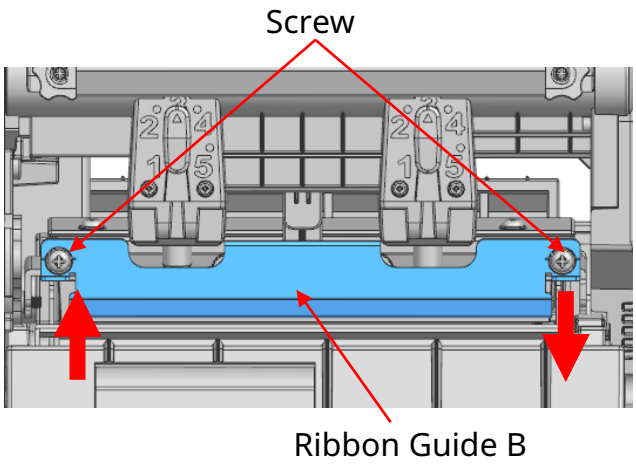 1) Lower the right side of the ribbon guide B. 2) Higher the left side of the ribbon guide B.
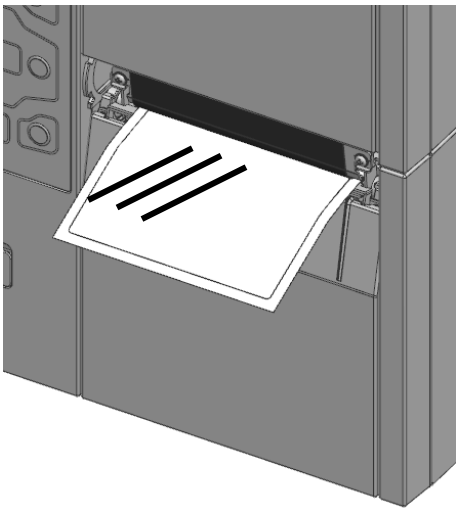 Wrinkles on the Left	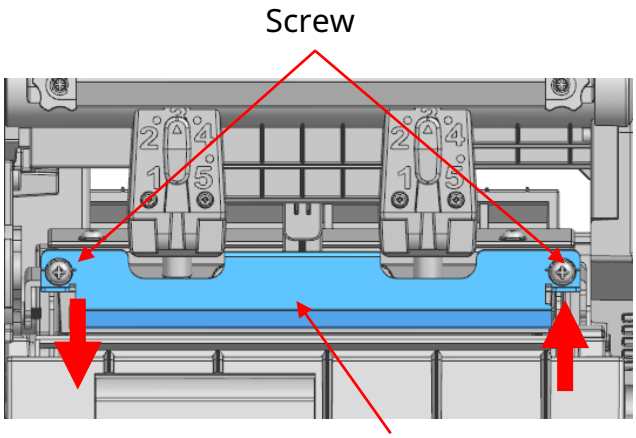 1) Lower the left side of the ribbon guide B. 2) Higher the right side of the ribbon guide B.

Do not adjust ribbon guide while the printer is printing.
The printer may be damaged.

3-9 How to Fine Tune Print Head Position

• When using special paper, you can fine tune the print head position. There is no need to do this when using standard paper.
By fine tuning the print head position, you can improve the printing quality.

1) Turn off the printer.

2) Unplug the power cord from the printer.

3) Slightly open the print head lever.

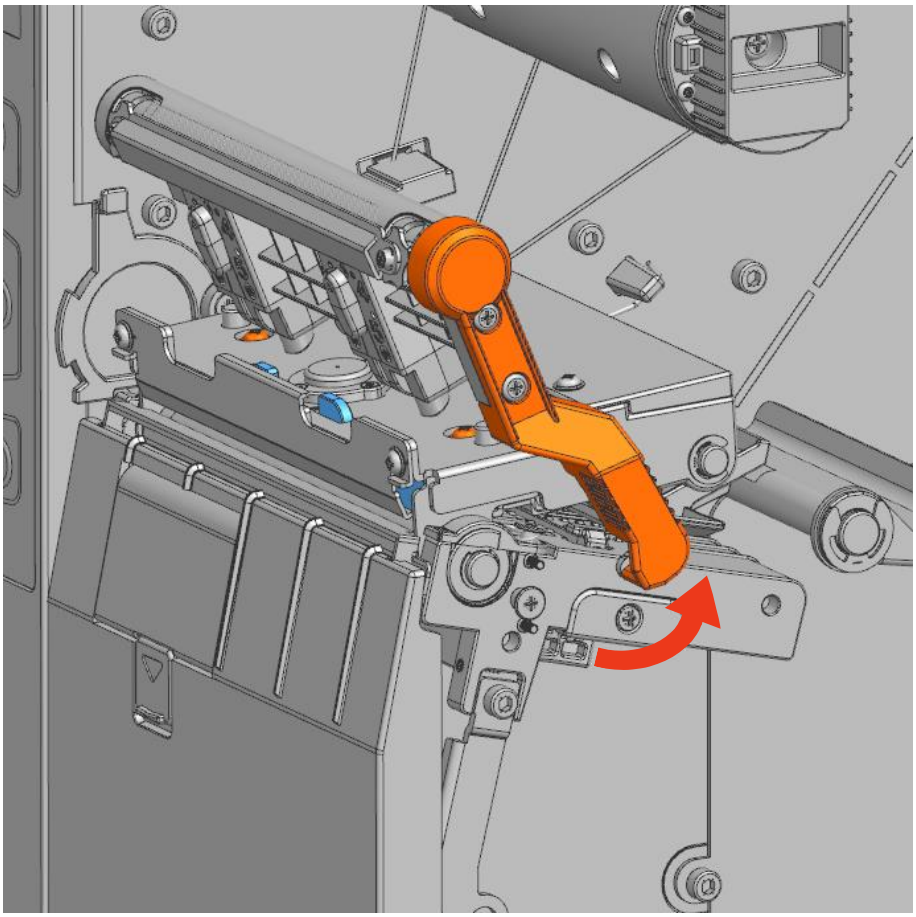

4) After slightly loosening the screws using a screwdriver,
adjust the print head adjustment lever by moving it forward and backward.

※ The factory default position of the print head lever is as far back as possible.

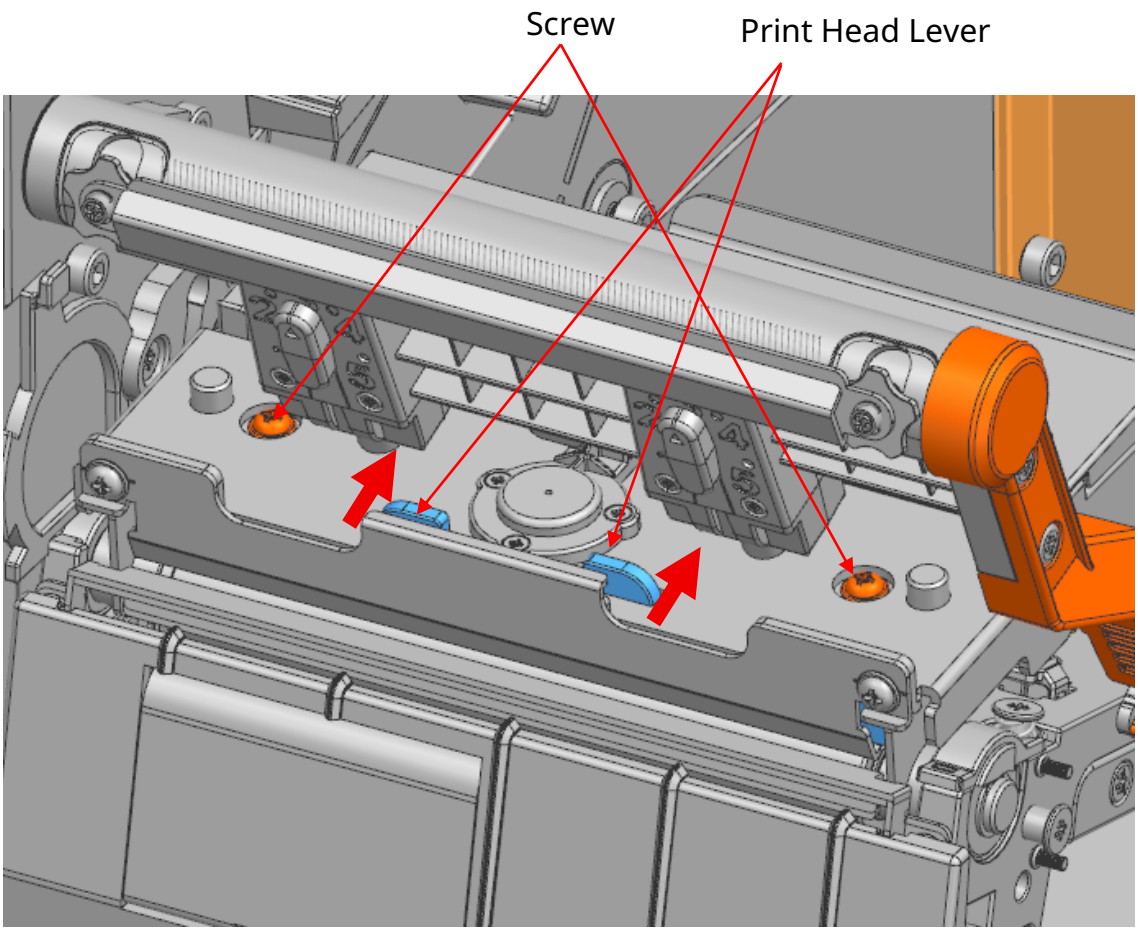

※ When using thick paper (0.26 to 0.3 mm), move the print head lever position as far forward as possible.

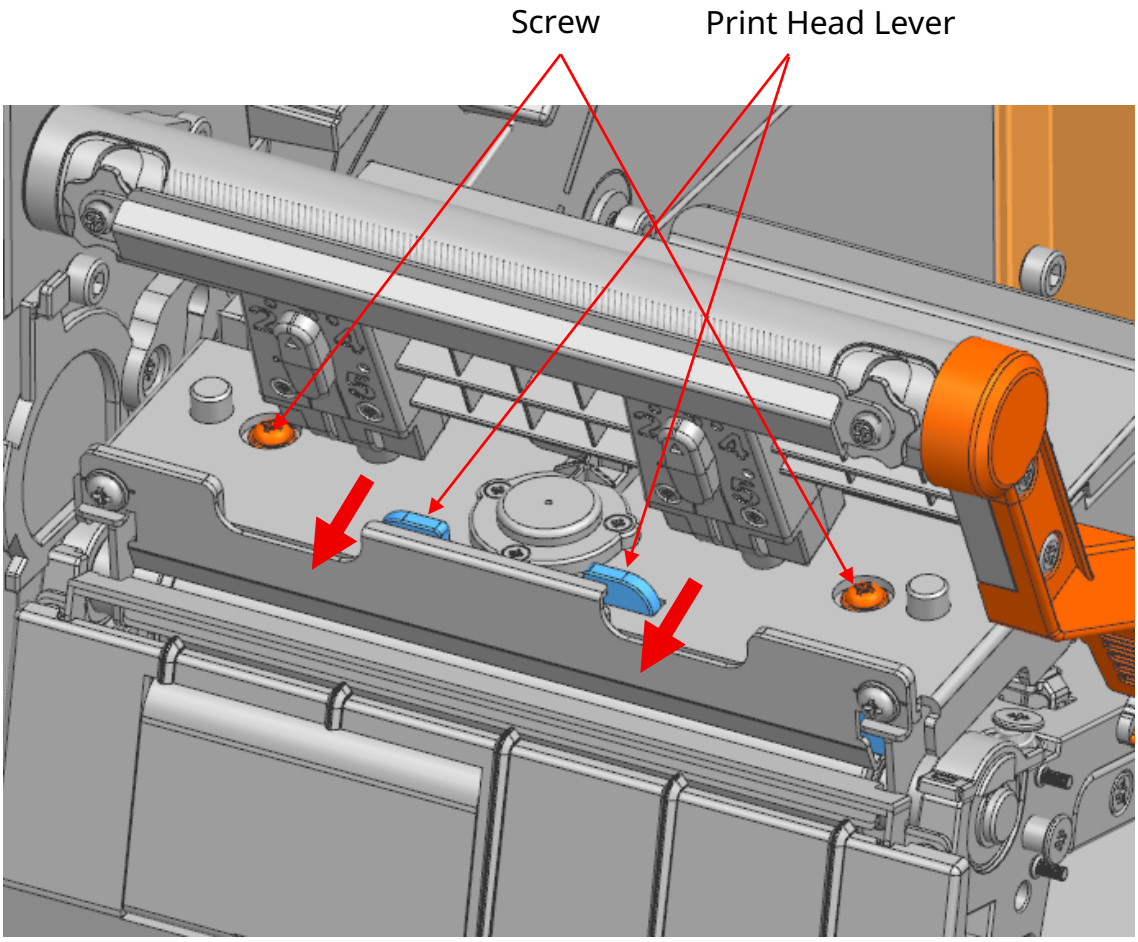

5) After fine tuning the position, re-assemble in reverse order of disassembly.

- Do not adjust the print head position while the printer is in operation as it may cause damage.
- Fine tuning the print head position significantly affects the printing quality. Perform this process only when necessary.

3-10 How to Adjust Near-end Sensor(Optional) Position

• Adjust the timing of Near-end detection by adjusting the position of the sensor.

1) How to Adjust Near-end Sensor Position

- Move the Near-end sensor lever up and down to adjust the sensor position.

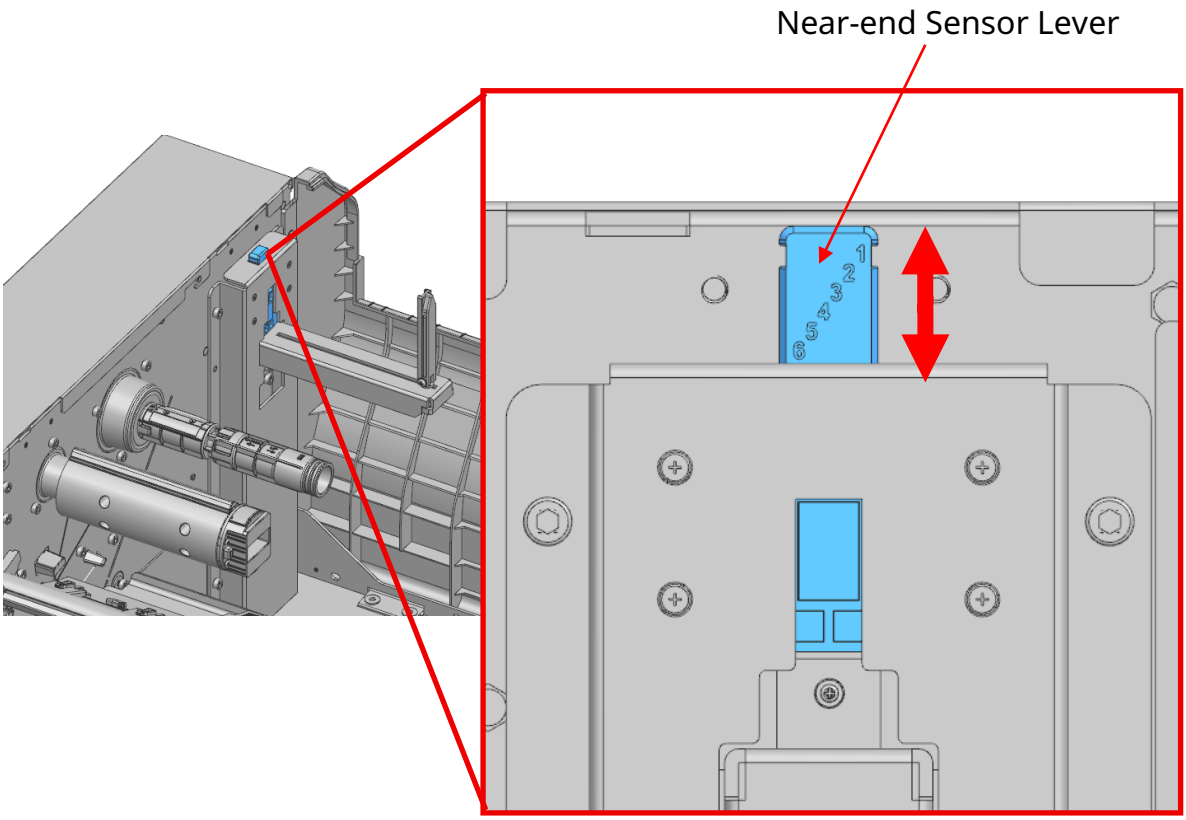

2) Remaining Media Length at Near-End Detection by Sensor Position

The remaining media length shown in the table below is based on the following media specifications.

※ Media specifications: Media thickness (0.14 mm), Core inner diameter (3 inches)

Sensor Position	The Remaining Paper Length
1	12 m
2	17 m
3	23 m
4	29 m
5	36 m
6	44 m

The remaining media amount may vary depending on the media specifications.

4. Printer Setting

4-1 Menu Composition(Standard Model, Touch Screen Model)

	Explanation	
Setting	Print Width	
	Print Length	
	Print Direction	
	Print Speed	
	Print Density	
	Print Method	
	Media Type	
	Tear Off	
	Print Offset	
	Left Position	
	Print Mode	
	Power Up Action	
	Print Head Close	
	GPIO	GPIO Port Mode
		Start Print Mode
		Error on Pause
		Reprint
		Voltage Info.

	Explanation			
Interface	Serial	Baud Rate		
		Data Bits		
		Parity		
		Stop Bit		
		Host Handshake		
	Ethernet	IP Protocol		
		IP Address		
		Subnet Mask		
		Gateway		
		MAC Address		
	WLAN	Network		
		ESSID (APID)		
		Auth (Authentication)		
		Encrypt (Encryption)		
		WEP Password		
		PSK Password		
		IP Protocol		
		IP Addresss		
		Subnet Mask		
		Gateway		
		Frequency		
		SWC (Simple Wi-Fi Connect)		
		SWC (Simple Wi-Fi Connect)	Execute SWC	
			Print App URL	
		WLAN Factory Reset		
	Bluetooth	Device Name		
		Pairing	Pincode	
			SSP(Secure Simple Pairing)	
		MAC Address		
		Role Mode	Bluetooth Low Energy	
			Classic	Auth&Enc (Authentication & Encryption)
				Connect Mode
		BT Factory Reset		
	Interface Info			

	Explanation
Sensor	Gap Calibration
	Black Mark Calibration
	Max Calibration Length
	Sensor Sensitivity

	Explanation	
Files	Saved File	Template
		Image
		Download Font
		E Drive (Flash Memory)
		A Drive (USB Memory)
	Twin Function	Printer Setting
		Template
		Image
		Download Font
	Firmware Update	

	Explanation	
Tools	Self Test	
	Factory Reset	
	Dump Mode	
	Print Head Check	
	LCD	Dead Pixel Test
		Touch Position Test
		Backlight Brightness
	Real Time Clock	Date Setting
		Time Setting
		Date Format
		Time Format
	Language Setting	
	Emulation	
	USB Serial Number	
	Buzzer Setting	
	Sleep Mode	
	Security	Password Enable
		Password Setting
	Demo Print	
	Reprint Mode	

	Explanation	
Infomation	Printer Info	
	Installation & Usage	Media Installation
		Media Installation (Peel Off)
		Media Installation (Rewinder)
		Ribbon Installation
		Peel off Installation
		Auto Cutter Installation
		Replace Media
		Replace Ribbon
		Replace Print Head
	Troubleshooting	
	Contact US	

*Available only on the Touch Screen model.

	Explanation	
RFID	RFID Setting	Transponder Position
		Read/Write Power
		Number of retry
		Number of label
	RFID Calibration	
	RFID Test	Write
		Read
	RFID Information	Valid Count
		Void Count

4-2 Menu Select Method(Standard Model)

1) This is print ready status LCD output screen.

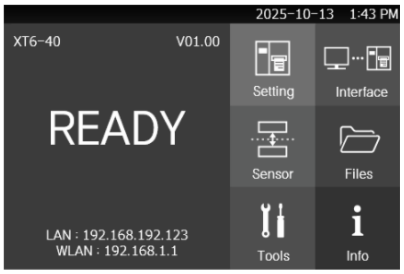

2) Press function button, direction button or OK button.

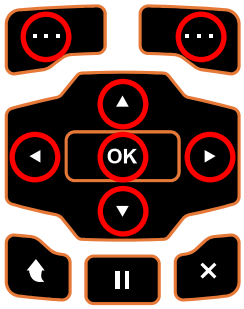

3) The setting menu is selected.

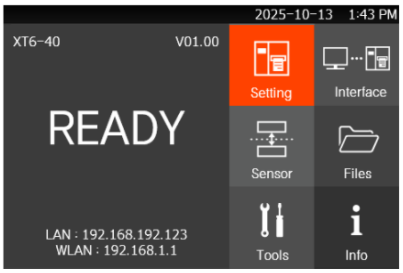

4) Use direction buttons to move to the desired menu.

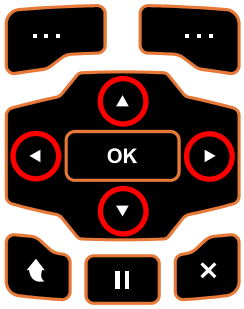

5) Press OK or the right function button to enter the sub menu.

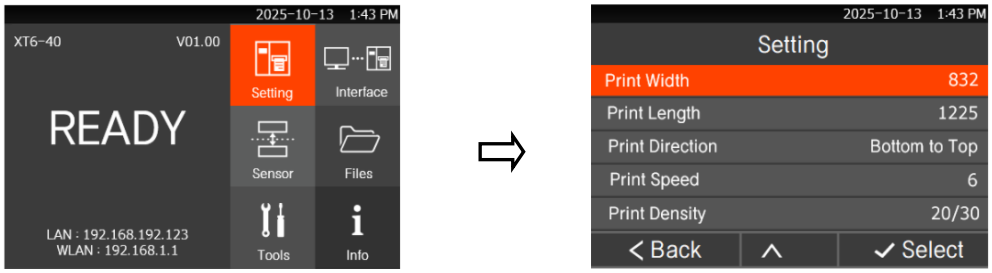

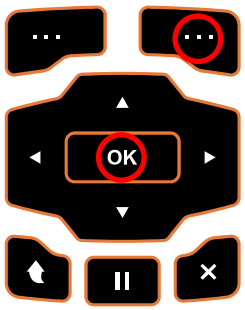

6) If there are no input for 5 seconds, it returns to main screen

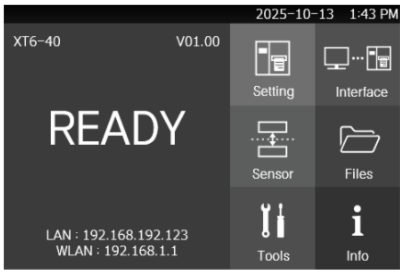

4-3 Setting Confirm Method(Standard Model)



1) How to use the up and down buttons

(1) Select the desired setting value using ▲ or ▼ button.

(2) After selecting the setting value, save it with ··· button.

(3) If you want to exit the menu without setting, press ··· button to move to the previous screen.

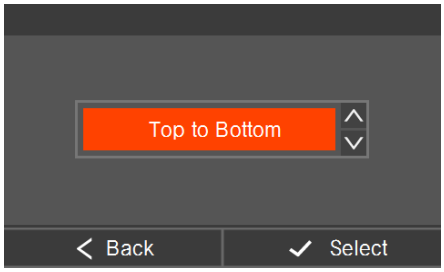

2) How to input numbers

(1) Select the desired input value using ▲,▼,◀,▶ button

(2) Enter the desired value using OK button.

(3) With Back space, you can delete the input value

(4) With < >, you can move the cursor.

(5) After entering set value, save it using ··· button.

(6) If you want to exit the menu without setting, press ··· button to move to the previous screen.

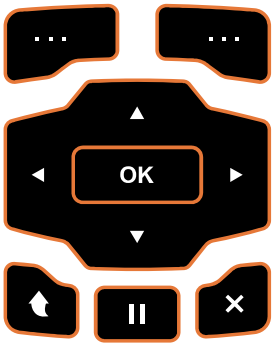

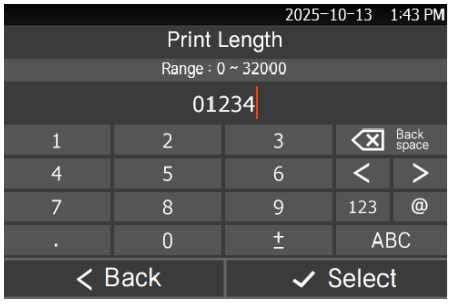

3) How to input characters

(1) Select the desired input value using ▲,▼,◀,▶ button



(2) Enter the desired value using OK OK button.

(3) With Back space, you can delete the input value.

(4) With < >, you can move the cursor.

(5) With 123, you can move to the numeric input screen.

(6) With @, you can move to the symbol input screen.



(7) With abc, you can move to lower case input screen.

(8) After entering set value, save it using ··· button.

(9) If you want to exit the menu without setting, press ··· button to move to the previous screen.

4-4 Menu Select Method (Touch Screen Model)

1) Press the Settings menu while in the Ready to Print state.



2) Press screen to enter the sub menu.

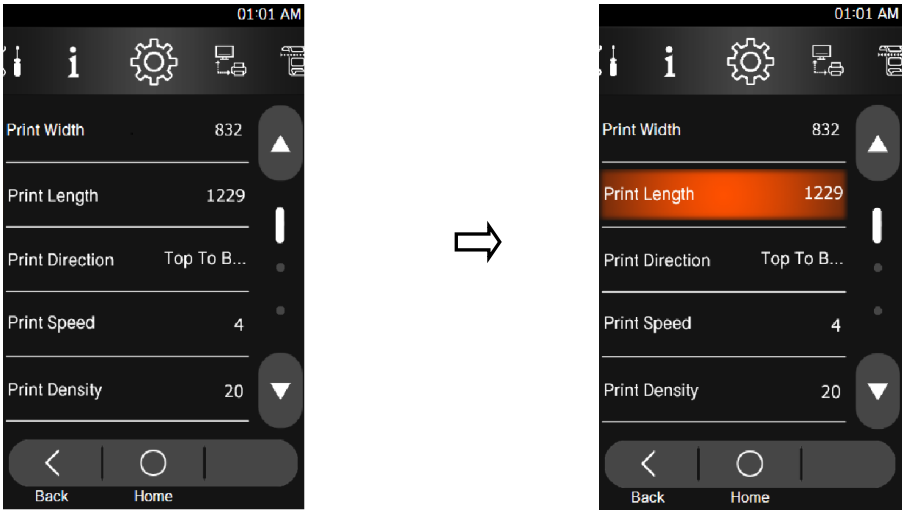

3) If there are no input for 5 seconds, it returns to main screen .

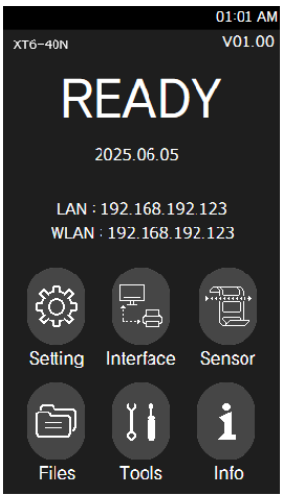

4-5 Setting Confirm Method(Touch Screen Model)

1) How to use the up and down buttons

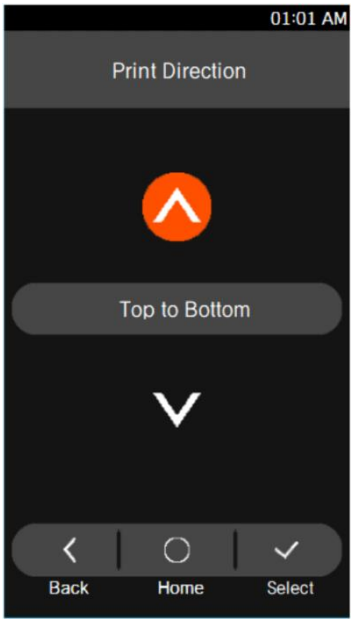

(1) Select the desired setting value using ▲ or ▼ button

(2) After selecting the setting value, save it with ✓ button.

(3) If you want to exit the menu without setting, press < button to move to the previous screen

(4) If you want to exit the menu without setting, press ○ button to move to the main screen

2) How to input numbers

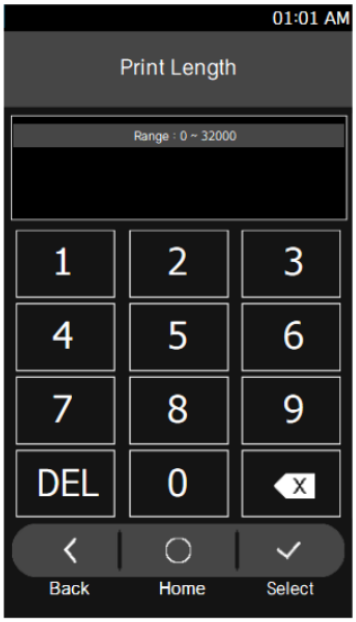

(1) Select the desired setting value using number keypad.

(2) With ⌫, you can delete the input value.

(3) With DEL, you can delete the all input value.

(4) After selecting the setting value, save it with ✓ button.

(5) If you want to exit the menu without setting, press < button to move to the previous screen.

(6) If you want to exit the menu without setting, press ○ button to move to the main screen.

3) How to input characters(English only)



(1) Select the desired setting value using keypad.

(2) With , you can delete the input value.

(3) With , you can input the capital lettere.

(4) After selecting the setting value, save it with button.

(5) If you want to exit the menu without setting, press button to move to the previous screen

(6) If you want to exit the menu without setting, press button to move to the main screen.

4) How to input IP address



(1) Select the desired IP Address using number keypad.

(2) With , you can delete the input value.

(3) With , you can input the Dot(.)
* from 0 to 99, press Dot(.) to move next
* from 100 to 255, Dot(.) would be automatically generated.

(4) After selecting the setting value, save it with button.

(5) If you want to exit the menu without setting, press button to move to the previous screen.

(6) If you want to exit the menu without setting, press button to move to the main screen.

4-6 Setting Menu Explanation(Standard, Touch Screen Model)

4-6-1 Setting

List	Explanation
Print Width	**Explanation** Setting media width[dots] Function to adjust image buffer size according to print width **Default Value** 203dpi: 832 dots(104mm) 300dpi: 1,248 dots(105.7mm) 600dpi: 2,496 dots(105.6mm) **Maximum Value** 203dpi: 832 dots(104mm) 300dpi: 1,248 dots(105.7mm) 600dpi: 2,496 dots(105.6mm)
Print Length	**Explanation** Setting media length[dots] Function to adjust image buffer size according to print length **Default Value** 203dpi: 1,225dot (153mm) 300dpi: 1,811dot (150mm) 600dpi: 3,622dot (150mm) **Maximum Value** 203dpi: 32,000dot (4,000mm) 300dpi: 30,000dot (2,500mm) 600dpi: 24,000dot (1,000mm)

Print Direction	**Explanation** Setting printing direction Top to bottom: Printing from top to bottom Bottom to Top: Printing from bottom to top **Default Value** Bottom to Top **Variable Value** Bottom to Top, Top to Bottom Printing Direction 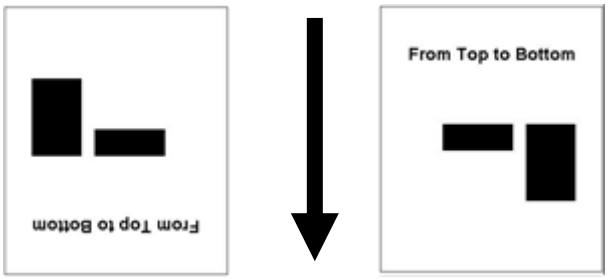 Top to bottom Bottom to top
Print Speed	**Explanation** Setting print speed[ips] **Default Value** 203dpi: 6ips 300dpi: 6ips 600dpi: 3ips **Variable Value** 203dpi: 2 ~ 14ips 300dpi: 2 ~ 12ips 600dpi: 1 ~ 5ips
Print Density	**Explanation** Setting print density **Default Value** 203dpi: 20 300dpi: 20 600dpi: 15 **Variable Value** 0 ~ 30

Print Method	**Explanation** Setting print method **Default Value** Transfer **Variable Value** Transfer, Direct
Media Type	**Explanation** Setting media type **Default Value** Gap **Variable Value** Gap, Black Mark, Continuous
Tear Off	**Explanation** Setting media position[dots] for tear off after printing or feed **Default Value** 0 **Variable Value** -100 ~ 100
Print Offset	**Explanation** Setting top print position[dots] **Default Value** 0 **Variable Value** -100 ~ 100
Left Position	**Explanation** Setting left print position[2dots] **Default Value** 0 **Variable Value** -300 ~ 300

Print Mode	**Explanation** Setting print mode suitable to the printer option **Default Value** Tear Off **Variable Value** Tear Off, Auto Cutter, Rewinder
Power Up Action	**Explanation** Setting the action for the printer after the power-up sequence. **Default Value** No Feed **Variable Value** No Feed, Set Label Length, Media Calibration, Feed
Print Head Close	**Explanation** Setting the action for the printer when you close the print head **Default Value** Feed **Variable Value** Feed, Standby Mode, No Feed, Set Label Length, Media Calibration

4-6-2 GPIO

List	Explanation
GPIO Port Mode	**Explanation** Set the “END PRINT” signal for the GPIO port. **Default Value** Off **Variable Value** Off: GPIO disabled (printing without the start signal) 1: In general, the end print signal is HIGH and becomes LOW when printing/feeding. 2: In general, the end print signal is LOW and becomes HIGH when printing/feeding. 3: In general, the end print signal is HIGH and becomes LOW for 40ms after printing. 4: In general, the end print signal is LOW and becomes HIGH for 40ms after printing. **Command** ^gt
Start Print Mode	**Explanation** Set the “START PRINT” signal for the GPIO port. **Default Value** Level Mode **Variable Value** Pulse Mode: starts printing when the signal changes from HIGH to LOW Level Mode: starts printing when the LOW signal is input **Command** ^gt
Error on Pause	**Explanation** Add Pause to the "ALERT" signal for the GPIO port. **Default Value** Enable **Variable Value** Enable, Disable **Command**

	^gt
Reprint	**Explanation** Set the “REPRINT” signal type for the GPIO port. **Default Value** Disable **Variable Value** Disable, Active Low, Active High **Command** ^gt
Voltage Info.	**Explanation** Check the ground status and output voltage. **Command** ^gv

4-7 Interface Menu Explanation(Standard, Touch Screen Model)

4-7-1 Serial

List	Explanation
Baud Rate	**Explanation** Setting the baud rate **Default Value** 115200 **Variable Value** 9600, 19200, 38400, 57600, 115200
Data Bits	**Explanation** Setting the data bit **Default Value** 8 **Variable Value** 7, 8
Parity	**Explanation** Setting the parity **Default Value** None **Variable Value** None, Odd, Even
Stop Bit	**Explanation** Setting the stop bit **Default Value** 1 **Variable Value** 1, 2
Host Handshake	**Explanation** Setting the handshake **Default Value** RTS_CTS **Variable Value** RTS_CTS, DTR_DSR, XON_XOFF

4-7-2 Ethernet

List	Explanation
IP Protocol	**Explanation** Setting IP assignment method **Default Value** DHCP **Variable Value** DHCP, Static IP
IP Address	**Explanation** Setting IP Address method **Default Value** Static IP: 192.168.192.123 DHCP: 0.0.0.0 **Variable Value** 0 ~ 255
Subnet Mask	**Explanation** Setting subnet mask **Default Value** Static IP: 255.255.255.0 DHCP: 0.0.0.0 **Variable Value** 0 ~ 255
Gateway	**Explanation** Setting gateway **Default Value** Static IP: 192.168.192.254 DHCP: 0.0.0.0 **Variable Value** 0 ~ 255
MAC Address	**Explanation** Indicating MAC address

4-7-3 WLAN

List	Explanation
Network	**Explanation** Setting WLAN operation mode **Default Value** Soft AP **Variable Value** Soft AP, Infrastructure, P2P
ESSID	**Explanation** Setting the ID of AP to be accessed **Default Value** PRINTER_xxxxxx(product specific value)
Auth	**Explanation** Setting WLAN authentication method **Default Value** Open System **Variable Value** Open System, Shared Key, WPA1PSK, WPA2PSK, WPA1EAP, WPA2EAP
Encrypt	**Explanation** Setting WLAN encryption method **Default Value** None **Variable Value** None, WEP64/128, TKIP, AES, AES+TKIP
WEP Password	**Explanation** Setting WEP password
PSK Password	**Explanation** Setting PSK password

IP Protocol	**Explanation** Setting IP assignment method **Default Value** DHCP **Variable Value** Static IP, DHCP
IP Address	**Explanation** Setting IP address **Default Value** Static IP: 192.168.1.1 DHCP: 0.0.0.0 **Variable Value** 0 ~ 255
Subnet Mask	**Explanation** Setting subnet mask **Default Value** Static IP: 255.255.255.0 DHCP: 0.0.0.0 **Variable Value** 0 ~ 255
Gateway	**Explanation** Setting gateway **Default Value** Static IP: 192.168.1.254 DHCP: 0.0.0.0 **Variable Value** 0 ~ 255

<table>
<tr><td>Frequency</td><td colspan="2">Explanation
Setting Frequency

Default Value
2.4/5GHz(Priority:2.4GHz)

Variable Value
2.4GHz, 5GHz, 2.4/5GHz(Priority:2.4GHz),
2.4/5GHz(Priority:5GHz)</td></tr>
<tr><td rowspan="2">SWC</td><td>Execute SWC</td><td>Explanation
Connecting printers to network environments using SWC(Simple Wi-Fi Connect) mode</td></tr>
<tr><td>Print App URL</td><td>Explanation
Site linking(QR code) for SWC technical support</td></tr>
<tr><td>WLAN Factory Reset</td><td colspan="2">Explanation
Initializes the WLAN settings to factory default</td></tr>
</table>

4-7-4 Bluetooth

List			Explanation
Device Name			**Explanation** Name of Device
Pairing	PIN Code		**Explanation** Changes required PIN code to connect
	SSP		**Explanation** Secures simple pairing **Default Value** Disable **Variable Value** Disable, Just Works, Numeric Comparison, Passkey Entry
MAC Address			**Explanation** Bluetooth device MAC address
Role Mode	Bluetooth Low Energy		**Explanation** Bluetooth Low Energy **Default Value** Disable **Variable Value** Disable, Enable
	Classic	Connect Mode	**Explanation** Setting Bluetooth connection mode **Default Value** Mode 2 **Variable Value** Mode 1, Mode 2, Mode 3
		Connect Mode	**Explanation** Setting Bluetooth connection mode **Default Value** Mode 2 **Variable Value** Mode 1, Mode 2, Mode 3
BT Factory Reset			**Explanation** Initializes the BT settings to factory default

4-8 Sensor Menu Explanation(Standard, Touch Screen Model)

List	Explanation
Gap Calibration	**Explanation** Detect media gap and calibrate automatically
Black Mark Calibration	**Explanation** Detect media black mark and calibrate automatically
Max Calibration Length	**Explanation** Adjustment of maximum calibration length **Default Value** 600 (mm) **Variable Value** 150 ~ 2000 (mm)
Sensor Sensitivity	**Explanation** Adjusts the sensitivity of the gap sensor **Default Value** 70 **Variable Value** 10 ~ 100

Depending on the characteristics of the media, the amount of media output may be different during gap / black mark calibration.

4-9 Files Menu Explanation(Standard, Touch Screen Model)

List	Explanation		
Files	**Saved File**	Template	**Refer** 4-10-1 Saved File
		Image	
		Download Fonts	
		E Drive (Flash Memory)	
		A Drive (USB Memory)	
	Twin Function	PRT Set (Printer Setting)	**Refer** 4-10-2 Twin Function
		Template	
		Image	
		Download Fonts	
	F/W Update		**Refer** 4-10-3 F/W Update

4-9-1 Saved File

Displays the list of object files stored in the printer on the LCD screen.

List	Explanation
Template	Template list stored in the printer
Image	Image list stored in the printer (*.pcx)
Download Font	Download font list stored in the printer
E Drive (Flash Memory)	Saved object files in E drive
A Drive (USB Memory)	Saved object files in A drive

4-9-2 Twin Function

Saves the current printer settings, save files (templates, images, download fonts) to another printer using USB, or loads the settings of another printer and saves files to the current printer.

List	Explanation
Printer Setting	**Explanation** Saves printer settings to a USB storage device, or loads the print settings from USB storage. **File path** F:\configuration
Template	**Explanation** Saves template file to a USB storage device, or load the template from USB storage. **File path** F:\ USER_AREA_TEMPLATES
Image	**Explanation** Saves image file to a USB storage device, or load the image from USB storage (*.pcx) **File path** F:\ USER_AREA_PCXImages
Download Font	**Explanation** Saves download font file to a USB storage device, or load the download font from USB storage. **File path** F:\ USER_AREA_FONTS

List	Explanation
Printer Setting	**Explanation** Saves printer settings to a USB storage device, or loads the print settings from USB storage. **File path** F:\configuration **• Save Function Explanation** - Connect a USB storage to the printer. - Select Save on the menu using the up and down buttons. - The printer_config file is created in the configuration folder of USB storage device. (The configuration folder is automatically created) **• Load Function Explanation** - Check whether the printer_config file exists in the configuration folder of the USB storage device. (If there is no file, save the printer settings first.) - Connect the USB storage to the printer. - Select Load from the Printer Setup menu using the up and down buttons. - Loading message is displayed while loading, and when loading is completed, USB loading completion message is displayed. - Check the change of the printer's settings.

List	Explanation
Template	**Explanation** Saves template file to a USB storage device, or load the template from USB storage. **File path** F:\ USER_AREA_TEMPLATES **• Save Function Explanation** - Connect a USB storage to the printer. - Select Save on the menu using the up and down buttons. - Template files are stored in the USER_AREA_TEMPLATES folder of USB storage device. (USER_AREA_TEMPLATES folder is automatically created) **• Load Function Explanation** - Check whether a template file exists in the USER_AREA_TEMPLATES folder of the USB storage device. (If the file does not exist, create a USER_AREA_TEMPLATES folder and save the template file to be copied to the printer below first) - Connect the USB storage to the printer. - Select Load from the Printer Setup menu using the up and down buttons. - Loading message is displayed while loading, and when loading is completed, USB loading completion message is displayed. - Go to Save File menu then, check the template file is normally saved to the printer.

List	Explanation
Image	**Explanation** Saves image file to a USB storage device, or load the image from USB storage (*.pcx) **File path** F:\ USER_AREA_PCXImages **• Save Function Explanation** - Connect a USB storage to the printer. - Select Save on the menu using the up and down buttons. - Image files are stored in the USER_AREA_PCXImages folder of USB storage device. (USER_AREA_PCXImages folder is automatically created) **• Load Function Explanation** - Check whether the image file exists in the USER_AREA_PCXImages folder of the USB storage device. (If there is no file, create the USER_AREA_PCXImages folder and save the image file to be copied to the printer below first.) - Connect the USB storage to the printer. - Select Load from the Printer Setup menu using the up and down buttons. - Loading message is displayed while loading, and when loading is completed, USB loading completion message is displayed. - Go to Save File menu then, check the image file is normally saved to the printer.

List	Explanation
Download Font	**Explanation** Saves download font file to a USB storage device, or load the download font from USB storage. **File path** F:\ USER_AREA_FONTS **• Save Function Explanation** - Connect a USB storage to the printer. - Select Save on the menu using the up and down buttons. - Download Font files are stored in the USER_AREA_FONTS folder of USB storage device. (USER_AREA_FONTS folder is automatically created) **• Load Function Explanation** - Check if the downloaded font file exists in the USER_AREA_FONTS folder of the USB storage device. (If there is no file, create the USER_AREA_FONTS folder and save the download font file to be copied to the printer below first.) - Connect the USB storage to the printer. - Select Load from the Printer Setup menu using the up and down buttons. - Loading message is displayed while loading, and when loading is completed, USB loading completion message is displayed. - Go to Save File menu then, check the download font file is normally saved to the printer.

4-9-3 Firmware Update

Firmware can be updated through USB storage.

F/W Update	**Explanation** Printer firmware update available using the USB storage directly without any communication. **File path** F:\ FW_DOWNLOAD **File name** “XT6-4x_Vxx.xx_STD_mmddyy.fls” in F:\ FW_DOWNLOAD folder. (203dpi : x is 0 / 300dpi : x is 3 / 400dpi : x is 6) **• Download process explanation** - Check firmware file(*.fls) is in FW_DOWNLOAD folder of USB storage. (If there is no folder, please create FW_DOWNLOAD folder and save the firmware file (* .fls) to it.) - Connect USB storage to the printer. - Select “F/W Update” from the “Files” menu. - Select the firmware download menu. - If the message "F/W Downloading" is displayed, the firmware download has started normally. - When the firmware download is completed successfully, the message "Printer Restart" is displayed and the rebooting process is automatically performed.

4-10 Tools Menu Explanation(Standard, Touch Screen Model)

List		Explanation
Self Test		**Explanation** Prints for self-test
Factory Reset		**Explanation** Initializes the printer settings to factory default
Dump Mode		**Explanation** Diagnoses communication status when printing is not normal **Default Value** Off **Variable Value** Off, Print, USB Memory
Print Head Check		**Explanation** Dot-out check of head through printing
LCD	Dead Pixel Test	**Explanation** LCD pixel test function
	Touch Position Test	**Explanation** LCD touch position test function (supported on Touch Screen Model only)
	Backlight Brightness	**Explanation** Setting backlight brightness **Default Value** 70 **Variable Value** 10 ~ 100
Real Time Clock		**Explanation** Setting RTC date and time Setting RTC date and time format **Date format** YYYY-MM-DD, YYYY/MM/DD, MM-DD-YYYY, MM/DD/YYYY, DD-MM-YYYY, DD/MM/YYYY **Time format** 12H, 24H

Language Setting	**Explanation** Setting language to be displayed on the LCD **Default Value** English **Variable Value** English, Korean, German, French, Spanish, Chinese(Traditional), Chinese(Simplified), Japanese, Thai, Italy, Norway, Portuguese, Swedish, Danish, Dutch, Finnish, Czech, Romanian, Russian, Polish, Turkish
Emulation	**Explanation** Setting printer emulation **Default Value** AUTO **Variable Value** AUTO(SLCS, BPL-Z, BPL-E), BPL-D, PDF
USB Serial Number	**Explanation** Checks USB serial number
Buzzer Setting	**Explanation** Setting beep on / off **Default Value** Enable **Variable Value** Enable, Disable
Sleep Mode	**Explanation** Sleep mode on / off **Default Value** Enable **Variable Value** Enable, Disable

Security	**Explanation** Setting a password to restrict printer settings **Default Value** Disable **Variable Value** Disable, Enable
Demo Print	**Explanation** Demo format output function
Reprint Mode	**Explanation** A feature that allows you to reprint the last printed label **Default Value** Disable **Variable Value** Disable, Enable

4-11 Info Menu Explanation(Standard, Touch Screen Model)

List	Explanation
Printer Info	**Explanation** Checking the printer usage information
Installation & Usage	**Explanation** Site linking(QR code) for installation and usage instructions
Troubleshooting	**Explanation** Site linking(QR code) for troubleshooting
Contact US	**Explanation** Site linking(QR code) for technical support

4-12 RFID Menu Explanation

List		Explanation
RFID Setting	Transponder Position	**Explanation** RFID transponder position can be set to match RFID label characteristics. **Default Value** 0(dot) **Variable Value** 203dpi: -300 ~ +32000dots 300dpi: -450 ~ +30000dots 600dpi: -900 ~ +24000dots
	Read/Write Power	**Explanation** Read/Write transceiver power of RFID module. **Default Value** 15(*10dbm) **Variable Value** 0 ~ 30
	Number of retry	**Explanation** Set the number of retries when RFID coding fails. **Default Value** 3 **Variable Value** 0 ~ 10
	Number of label	**Explanation** Set the number of retry labels when RFID coding fails **Default Value** 2 **Variable Value** 0 ~ 10
RFID Calibration		**Explanation** Automatically calibrate transponder position and transceiver power of RFID labels
RFID Test		**Explanation** RFID write and read test function with transponder position and power set value
RFID Information		**Explanation** Check or reset saved RFID void/valid value.

5. Detailed Features

5-1 Pause/Cancel

• During multiple-page print jobs, the Pause and Cancel button can be used to pause printing and cancel the print job altogether, respectively.

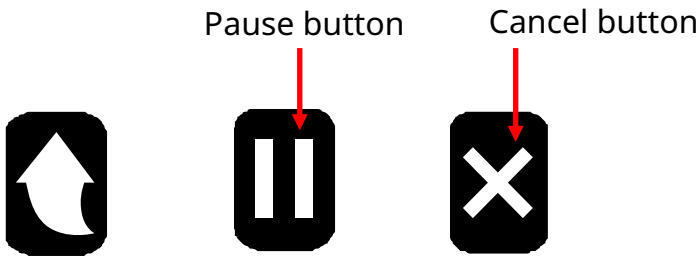

5-1-1 Pause/Resume Function

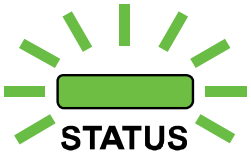

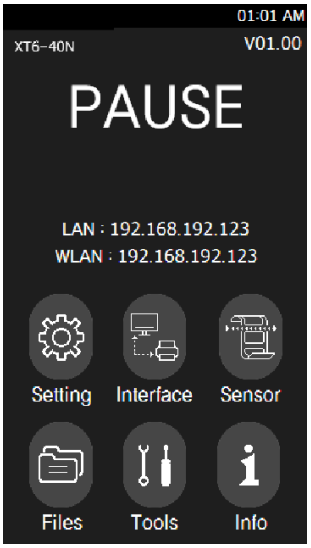

1) When printing, press the Pause button( ).

2) The printer will pause after finishing the current media printing and the status of LED, LCD will be as follows.
   - Status LED: Green Blink
   - Status LCD: PAUSE

3) While the print job is paused press the Pause button( ) again to resume printing.

5-1-2 Print Cancellation

The following processes occur in the print cancellation mode.

- All label printing cancelled
- All data received in the printer communications buffer deleted.
- All received data deleted.



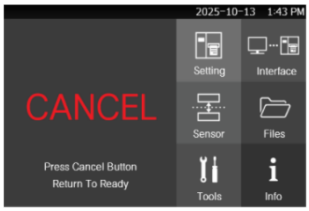

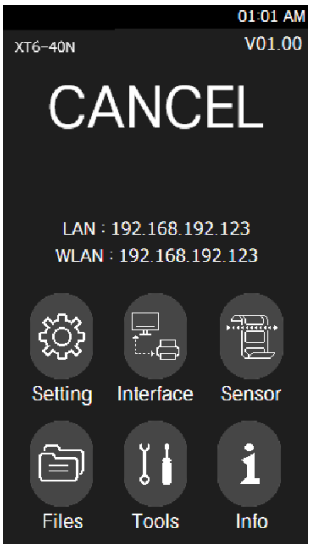

1) During printing and/or pause mode, press the Cancel button( ) enters the print cancellation mode.

2) The LCD Status in the print cancellation mode can be as follows.
   - STATUS LED: Green Blink
   - LCD: Press CANCEL

3) While in the print cancellation mode, press the Cancel button( ) again to return to print ready mode.

Contact the authorized dealer if the printer does not execute pause/resume function.

5-2 Smart Media Detection

• Media with gap and black mark can be identified without additional settings.

• 3~5 pages of media will be used depending on the types of media.

• Smart Media Detection function is executed in the followings cases

- When the printer is installed first time, it is executed by pressing Feed button( )
- If the printer is installed first time, printer command will execute Smart Media Detection.
- When change of media length or type is detected during feeding or printing.
- When the different media type command is entered from the configured media type.
- After factory reset.

If smart media detection fails, please proceed gap or B/M sensor auto-calibration accordingly

5-3 Gap Sensor Auto Calibration Mode

• Gap sensor auto calibration mode is used when the printer does not detect a gap on the media correctly.

Generally a printer is set to detect most types of gap but sometimes it fails to detect and keep feeding the media without a stop when special media used. In such case, use gap sensor auto calibration mode function for a proper detection.

1) Make sure that media roll has been installed properly.

2) In print ready mode press "**Sensor → Gap Calibration**" to process gap sensor auto Calibration mode.

* Please refer Tools Menu Explanation (4-1) for more information.

Contact the customer center if the printer does not execute gap sensor auto calibration mode function.

5-4 Black Mark Sensor Auto Calibration Mode

• Black mark sensor auto calibration mode is used when the printer does not detect a black mark on the media correctly.

Generally a printer is set to detect most types of black mark but sometimes it fails to detect and keep feeding the media without a stop when special media used. In such case, use black mark sensor auto calibration mode function for a proper detection.

1) Make sure that media roll has been installed properly.

2) In print ready mode press "**Sensor → Black Mark Calibration"** to process black mark sensor auto Calibration mode.

* Please refer Tools Menu Explanation (4-1) for more information.

Contact the customer center if the printer does not execute black mark sensor auto calibration mode function.

5-5 Media Sensor Manual-Calibration

• Manual-calibration of media detection can be used when the printer cannot detect a media gap (or black mark) even after auto-calibration has been executed.

Users can calibrate sensor parameters in detail by using the Unified Label Utility-II program provided by the manufacturer.

The Unified Label Utility-II can be downloaded from the Internet via the BIXOLON website. (www.bixolon.com)

Please make sure the printer is connected and execute the Unified Label Utility-II program. Please the Calibration Setting Manager Button after setting the interface type.

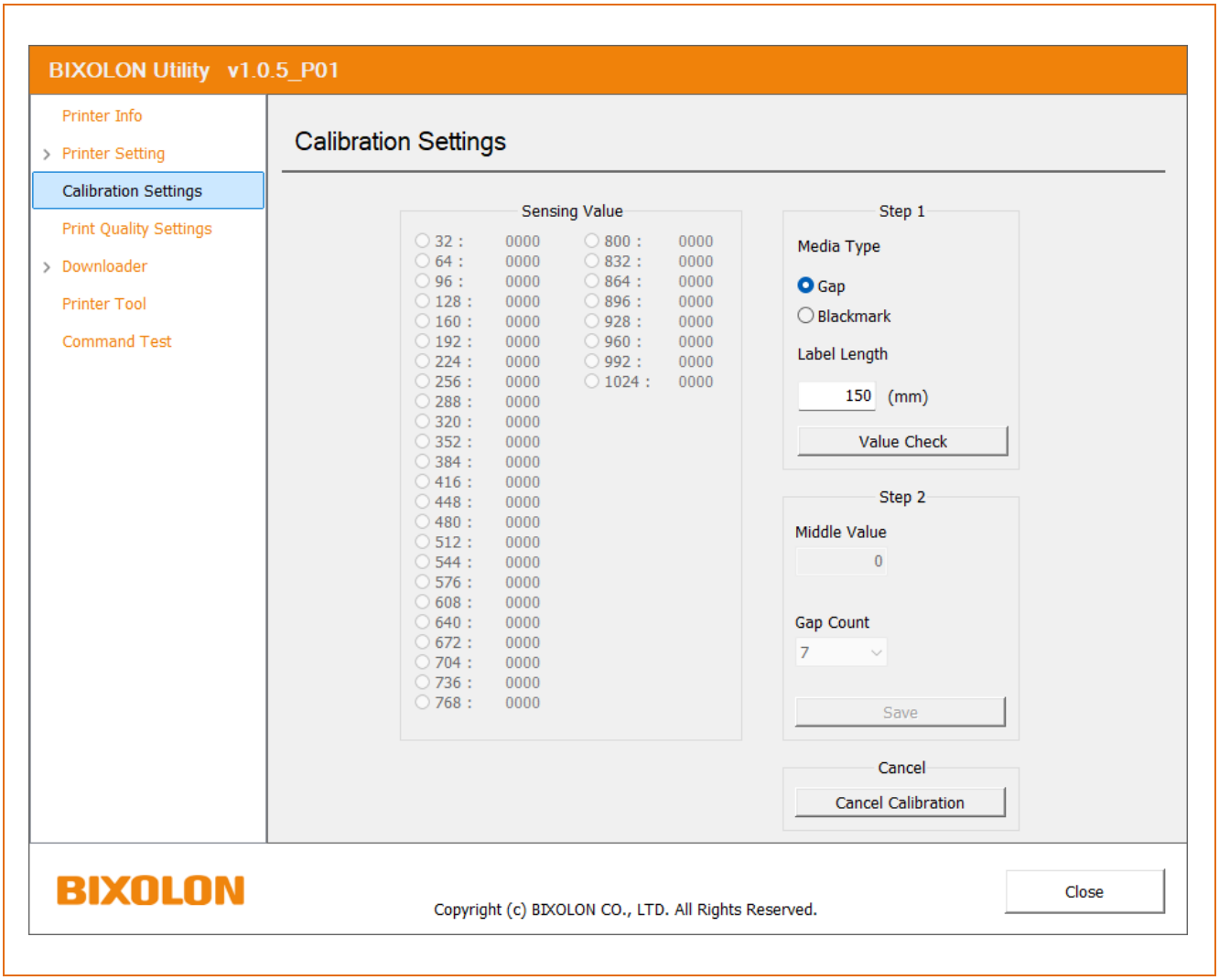

1) Select the sensing type and input the label length by millimeter and click “Check Sensing Value” button. Then printer starts calibration.

2) Printer will print the scanned values after calibration and the values will appear on the Screen.

3) Optimal sensing values will appear in black bold letters on the left of the utility screen and select one of the values and click on “Save Calibration”

4) If chosen value does not work properly, please try the other values among the black bold letters.

5) To go back to the initial value, please click on “Cancel Calibration”

Contact the customer center if the printer does not enter media sensor manual-calibration mode.

5-6 Sensor Sensitivity

• Use this mode when paper is not detected correctly.

You can adjust the strength of the sensor to fix the paper sensing problem.

Turn the printer off and on to recover to the print ready mode.

In print ready mode press "**Sensor → Sensor Sensitivity"** to run automatically Calibration with the setting value.

* Please refer Tools Menu Explanation (4-1) for more information.

When the setting value is not correct, sensing failure occurs.
In this case, change the setting value and reattempt.

5-7 Data Dump Mode

• This function can be used to diagnose the communication issues when the printer does not work properly.

In this mode, the received data are not analyzed and printed, instead they are dumped in hex format without processing.

Turn the printer off and on to recover to the print ready mode.

- In Print Ready mode, selecting **"Tools → Dump mode → Print"** activates the received data print mode.
- In Print Ready mode, selecting **"Tools → Dump mode → USB Memory"** activates the mode that saves received data to a USB memory device.
- In Dump mode, selecting **"Tools → Dump mode → Off"** save the data and deactivates Dump mode.

* Please refer Tools Menu Explanation (4-1) for more information.

Contact the customer center if the printer does not enter data dump mode.
Do not turn off the printer or remove the USB memory while the printer is in the Data Dump mode.

5-8 Factory Reset

• This function is used to factory reset the printer settings.

1) Make sure that media roll has been installed properly.

2) In Print Ready mode, selecting "**Tools→ Factory Reset"** will reset the printer settings to factory default values.

* Please refer Tools Menu Explanation (4-1) for more information.
* The printer will be rebooted automatically.

Contact the customer center if the printer does not enter factory reset function.

5-9 SWC (Simple Wi-Fi Connect)

• Connect the printer to a network using SWC(Simple Wi-Fi Connect) mode.
** blink rate of "Pulse" is slower than blink rate of "Flash"

• Make sure that media roll has been installed properly.
(1) Enter SWC(Simple Wi-fi Connect) Mode using buttons.
In Print Ready mode, selecting "**Interface → WLAN → SWC → Execute SWC"** will enter SWC mode.
(2) Printer's LCD Display "SWC Mode" indicates that the printer is in SWC Mode.
You can set network through Host Devices
- LCD Display: "Preparing..." → "SWC Mode"
(3) Once the network is not set correctly, LCD will Display Error Message, and try entering SWC Mode again.
- LCD Display: "Password Error Return to SWC mode"

5-10 Print Standby Mode

5-10-1 About Print Standby Mode

The printed area may become out of range of media if the media is not in the accurate printing position when the print head levers is opened and closed.
The printer is put into print standby mode instead of print ready mode when the print head levers is closed in order to prevent this problem, and it waits for additional user input.

The LED, LCD status in the print standby mode can be as follows.

- STATUS LED: Green Blink
- LCD: STANDBY

The data received during print standby mode will be printed after the printer recovers to print-ready mode.

5-10-2 How to switch the printer from Standby Mode to Print Ready Mode

- Press Pause button() to switch to print ready mode without feeding any media.
- Press Feed button() to feed one page to align the media position and switch to the print ready mode.

Contact the customer center if the printer does not execute print standby mode function.

5-11 RFID Auto Calibration(RFID Model)

• This process must be repeated each time a different RFID label type is used.

RFID coding does not work properly due to improper position setting of the RFID transponder (coding). In such case, use RFID auto calibration mode function for a proper detection.

1) Make sure that media roll has been installed properly.

2) In print ready mode, move to “RFID → RFID Calibration” and press the button to process RFID auto calibration.

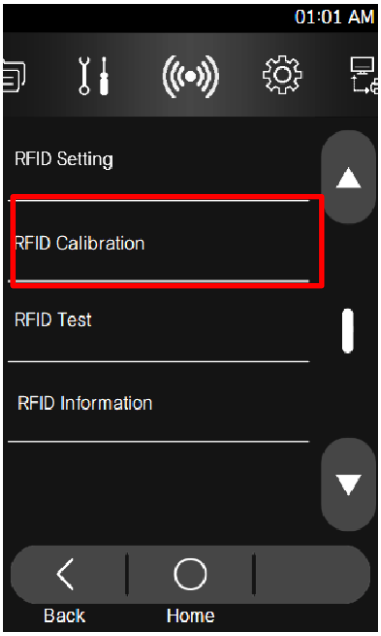

(1) If you want to exit the menu without setting, press button to move to the previous screen

(2) If you want to exit the menu without setting, press button to move to the main screen

Contact the customer center if the printer does not execute RFID auto calibration mode function.

6. Maintenance

6-1 Cleaning Printer

• Due to dust, foreign substances, adhesives, and other contaminants on or inside print head, print quality may be reduced. In this case, clean the printer using the cleaning tools for each area as indicated in the following table.

Area	Tools	Interval
Print Head	Cotton swab dipped in medical alcohol solution	When changing media
Platen Roller	Cloth dipped in medical alcohol solution (Cotton swab)	
Media Sensor		
Ribbon Sensor		
Media Feed Path	Air compressors, Cloth dipped in medical alcohol solution (Cotton swab)	
Ribbon Feed Path		
Manual cutting	Cloth dipped in medical alcohol solution (Cotton swab)	When a foreign substance is discovered
Peeler Roller(Option)		When changing media
Peeler Sensor(Option)		
Auto Cutter(Option)	Air compressors, Cotton swab dipped in medical alcohol solution	When a foreign substance is discovered

6-2 Cleaning Print Head

1) Open the media cover and print head levers and remove the media and ribbon.

2) Clean the print head toward both sides from the center using a cotton swab dipped in medical alcohol.

3) After cleaning, use the printer after alcohol has evaporated sufficiently (1 to 2 minutes) and the surface of print head has completely dried up.

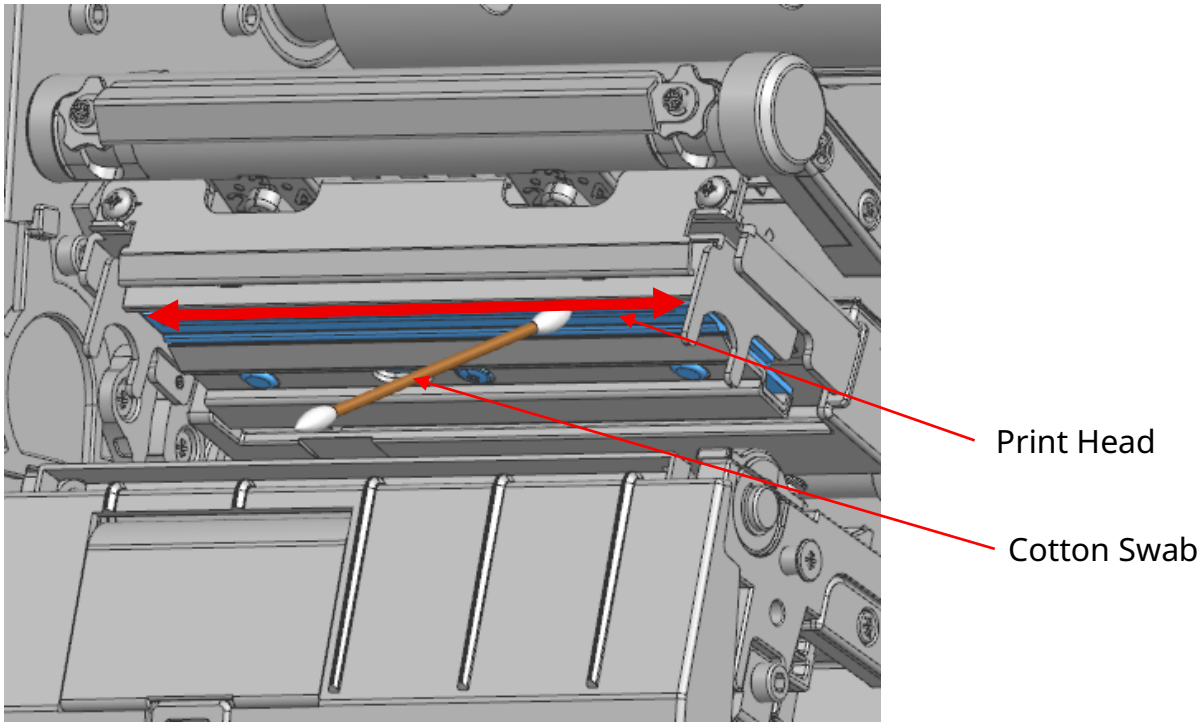

- Be sure to clean after turning the printer off.
- Be careful not to leave scratches in the print head
  The printer may be damaged.
- Print head is very hot while the printer is printing, so clean the printer after cooling it sufficiently with power off.
- Do not touch heated area of print–head when cleaning.
  Personal injury may result from static electricity, etc.

6-3 Cleaning Platen Roller

1) Open the media cover and print head levers and remove the media and ribbon.

2) While rotating the roller, remove dust or foreign substances using a dry cloth or cotton swab.

3) In case that adhesive substances or other contaminants remain, remove it using a cloth or cotton swab dipped in medical alcohol solution while rotating the roller.

4) After cleaning, use the printer after alcohol has evaporated sufficiently (1 to 2 minutes) and the surface of platen roller has completely dried up.

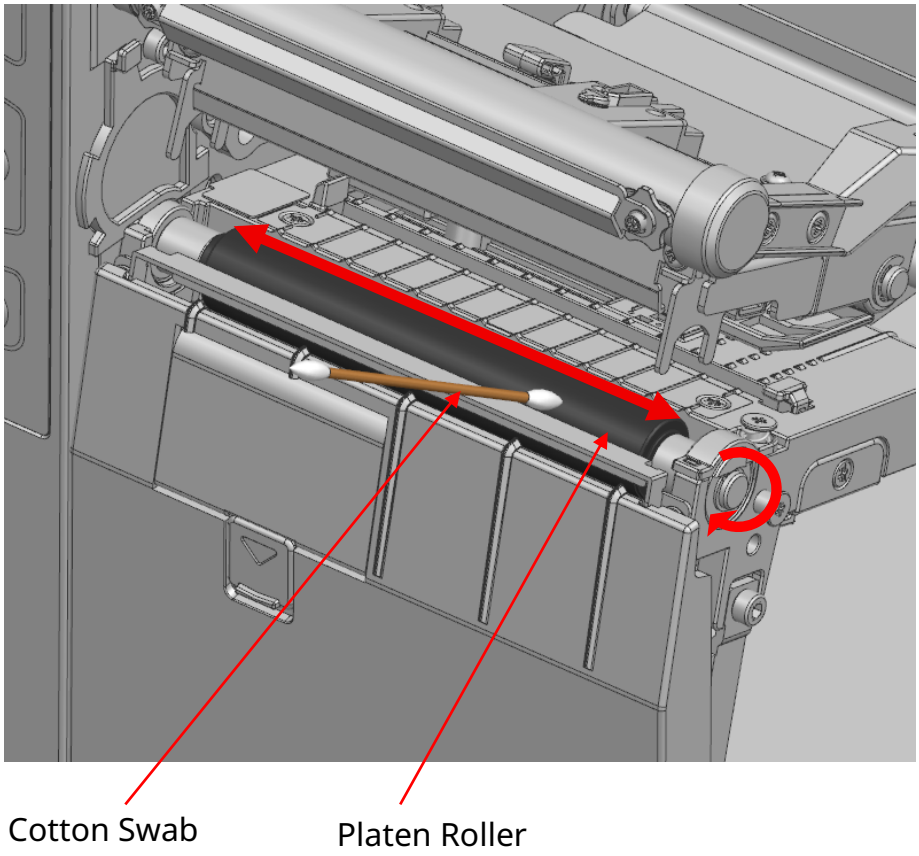

- Be sure to clean after turning the printer off.
- Be careful not to scratch the roller. The printer may be damaged.

6-4 Cleaning Auto Cutter (optional)

1) Open the media cover and print head levers and remove the media and ribbon.

2) After exposing the cutter blade completely by rotating the knob, remove dust or foreign substances using a cotton swab dipped in medical alcohol solution.

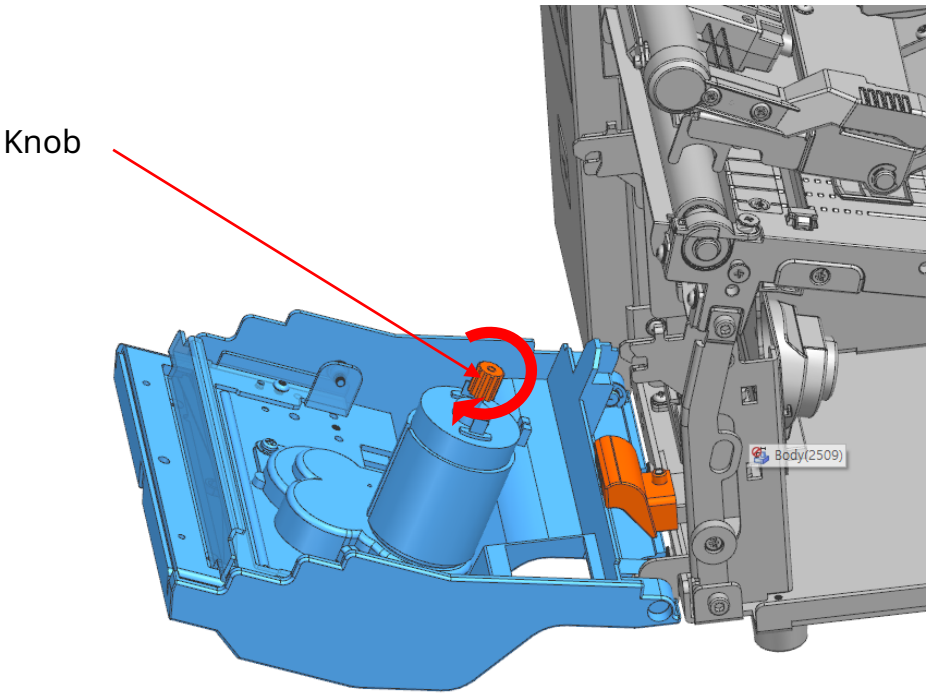

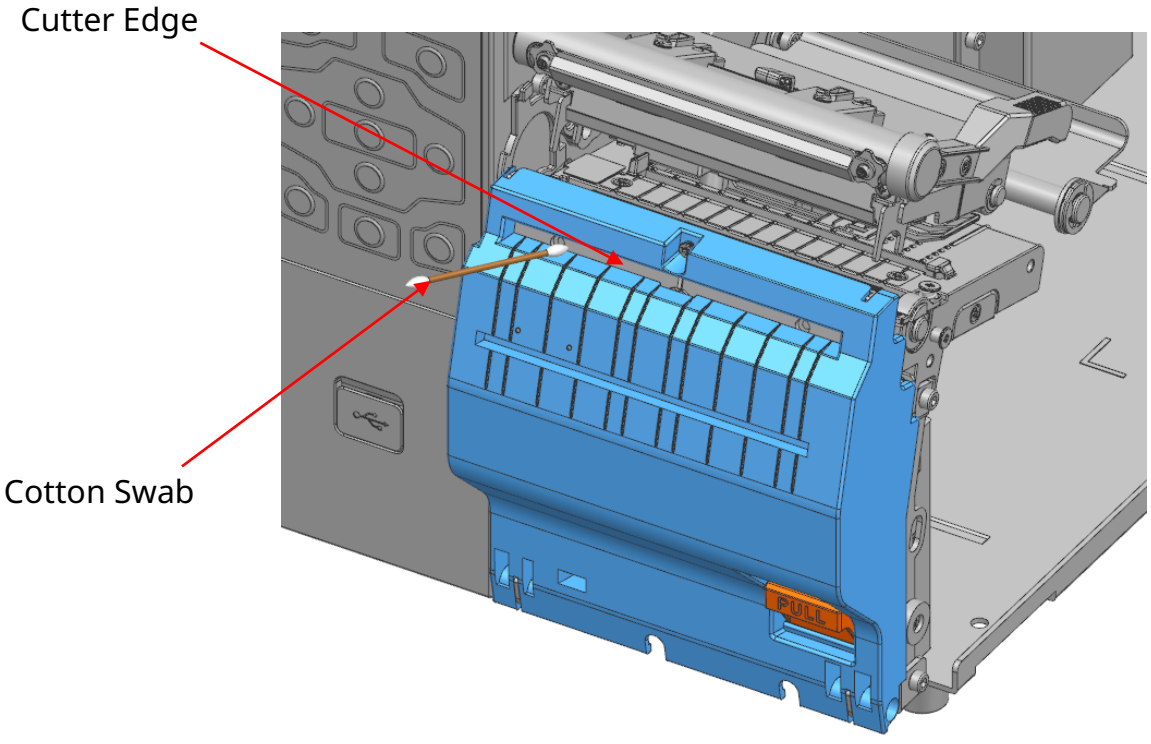

3) After cleaning, use the printer after alcohol has evaporated sufficiently (1 to 2 minutes) and the cutter blade has completely dried up.

- Be sure to clean after turning the printer off.
- Be careful not to scratch the roller. The printer may be damaged.
- Do not touch cutter edge of auto cutter when cleaning.
  This can cause serious bodily injury.

6-5 Cleaning Peeler Module (optional)

1) Open the media cover, print head levers, and peeler cover and remove the media and ribbon.

2) While rotating the roller, remove dust or foreign substances using a dry cloth or cotton swab.

3) In case that adhesive substances or other contaminants remain, while rotating the roller, remove it using a cloth or cotton swab dipped in medical alcohol solution.

4) After cleaning, use the printer after alcohol has evaporated sufficiently (1 to 2 minutes) and the surface of roller has completely dried up.

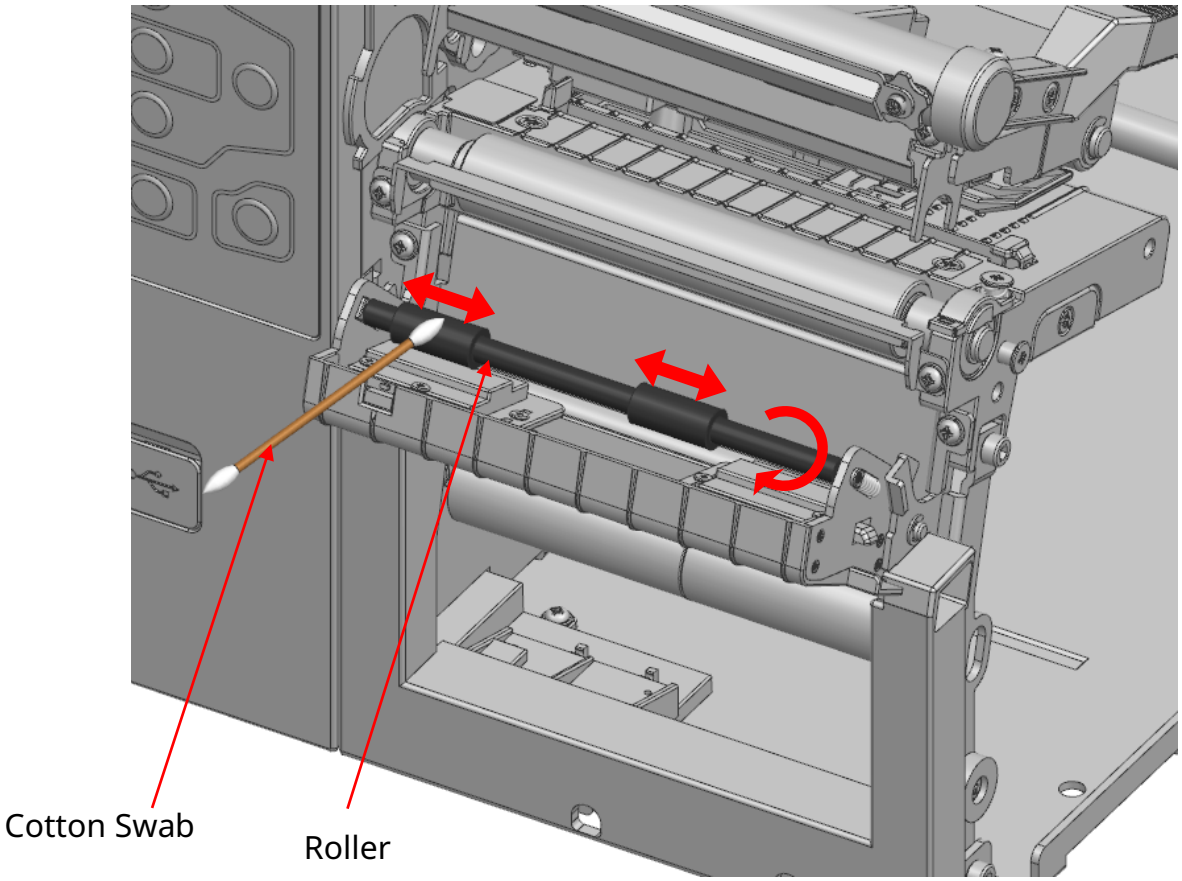

- Be sure to clean after turning the printer off.
- Be careful not to scratch the roller. The printer may be damaged.

7. Specifications

7-1 Printer Specifications

Item		Description
Printer	Printing Method	Thermal Transfer Printing
	Dot Density	XT6-40: 203dpi (8 dot/mm) XT6-43: 300dpi (11.8 dot/mm) XT6-46: 600dpi (23.6 dot/mm)
	Print Width	XT6-40: Max 104mm (Max 4.09 Inch) XT6-43: Max 105.7mm (Max 4.16 Inch) XT6-46: Max 105.6mm (Max 4.15 Inch)
	Print Speed	XT6-40: Max 356mm/sec (Max 14ips) XT6-43: Max 305mm/sec (Max 12ips) XT6-46: Max 127mm/sec (Max 5ips)
RFID	Frequency	Min. 860MHz ~ Max. 960MHz - KC(KOREA):917MHz~923.5MHz - FCC(USA): 902MHz~928MHz - CE(EUROPE): 865MHz~868MHz
	Protocol	ISO 18000-6C / EPC Gen2
Media	Width	25 ~ 114mm
	Outer Diameter	Max 203mm
	Inner Diameter	38mm & 76.2mm (1.5 Inch & 3 Inch),
Ribbon	Length/Width	Max 450m / 50 ~ 110mm
	Type	Wax, Wax resin, Resin, Outside, Inside
	Inner Diameter	25.4mm (1 Inch)
AC/DC Enclosed	Input Voltage/Current	AC 100-240V 3.5A
	Input Frequency	50/60Hz
	Output Voltage/Current	DC 24V 10A
Usage Conditions	Temperature	0~ 41 ℃ (Operating) -40 ~ 60 ℃ (Storage)
	Humidity (except for Media)	10 ~ 80 % RH (Operating) 5 ~ 95 % RH (Storage)

Print speed may vary depending on the data transfer speed and the combination of command.

- In case of danger, turn off the power to cut the connection.
- The power cord must be grounded to ensure safety and reduce electromagnetic interference

7-2 Label Types Specifications

•The label types used with this printer are as follows.

- Control Labels: PET
- Other Labels: PP, PET

Revision History

Ver.	Date	Description
1.00	12-10-2025	New
1.01	03-16-2026	Added Remaining Media Length at Near-End Detection by Sensor Position
1.02	08-18-2026	3-6-3 Revision of the content describing the method for adjusting the load according to ribbon length