BIXOLON

User's Manual

XM5-30 Series

MOBILE PRINTER

Ver. 2.00



www.bixolon.com

Table of Contents

Copyright **4**
WARNING & CAUTION **8**
Manual Introduction **11**
Product Introduction **12**

1. Preparation **14**
1-1 Included in the Box 14

2. Product Part Names **15**
2-1 Printer Part Names 15
2-2 Interface Part Names 16
2-3 Control Panel Part Names 17
2-3-1 Status icon 18
2-3-2 Main menu icon 19
2-3-3 Battery warning 20
2-3-4 Control Panel Button 21

3. Installation & Usage **22**
3-1 Printer Installation and Operating Environment 22
3-2 Battery Installation 22
3-3 Battery Charging 23
3-3-1 AC/DC PD Adapter Connection (Optional) 23
3-3-2 Single Battery Charger(Cradle) Usage (Optional) 24
3-3-3 Quad Battery Charger Usage (Optional) 25
3-4 Media Installation 27
3-4-1 Label Media Installation 27
3-4-2 Receipt Media Installation 28
3-5 Linerless Kit Installation (Optional) 29
3-6 Bluetooth & Wireless LAN Connection 30
3-7 Interface Cable Connection 31
3-7-1 USB Cable Connection (Optional) 31
3-7-2 Fixed USB Cable (C-C) Connection (Optional) 32
3-8 Belt Clip Usage 33
3-9 Roll Media or Fan-Fold Media Installation 34
3-9-1 Roll Media Width (“3 INCH” marking): 80 mm (3.15 inch) 34
3-9-2 Fan-fold Media Width (“FANFOLD” marking): 82 mm (3.22 inch) 34
3-9-3 Fan-fold Media Width: 28~76 mm (1.10~2.99 inch) 34

4. Self-Test **35**
4-1 Self-Test Instructions 35
4-2 Self-Test Sample 36

5. Maintenance 37
5-1 Printer Cleaning 37

6. Specifications 38
6-1 Printer Specifications 38
6-2 Recommended Media 38

Copyright

© BIXOLON Co., Ltd. All rights reserved.

This user manual and all property of the product are protected under copyright law.
It is strictly prohibited to copy, store, and transmit the whole or any part of the manual and any property of the product without the prior written approval of BIXOLON Co., Ltd.
The information contained herein is designed only for use with this BIXOLON product.
BIXOLON is not responsible for any direct or indirect damages, arising from or related to use of this information.

• The BIXOLON logo is the registered trademark of BIXOLON Co., Ltd.
• All other brand or product names are trademarks of their respective companies or organizations.

BIXOLON maintains ongoing efforts to enhance and upgrade the functions and quality of all our products.
In the following, product specifications and/or user manual content may be changed without prior notice.

Caution

Electronics, such as printers, are prone to damage by static electricity. Therefore, to protect the printer from static electricity, be sure to turn off the printer before connecting or disconnecting the cable to the rear of the printer. If the printer is damaged by static electricity, contact your local dealer.

Warning

Hazardous moving parts
Keep fingers and other body parts away
Pull the print head lever can be stop all moving parts.

IEC 60417-6057 (2011-05) for other moving parts.

Mise en garde

Les appareils électroniques, tels que les imprimantes, risquent d'être endommagés par l'électricité statique. Par conséquent, pour protéger l'imprimante de l'électricité statique, veillez à l'éteindre avant de connecter ou de déconnecter le câble situé à l'arrière de celle-ci. Si l'imprimante est endommagée par l'électricité statique, contactez votre revendeur local

Cet appareil n'est pas adapté d'utilser dans des endroits où des enfants sont probablement d'être présents.

Lorsque l'imprimante fonctionne avec le capot ouvert, ne portez rien qui puisse entrer en contact avec le mécanisme, tel que des vêtements, des colliers, des bagues, des montres ou des certificats d'employé à proximité. Éloignez-vous également de l'imprimante car il est dangereux que certaines parties du corps entrent en contact avec celle-ci. Si un objet ou une partie de votre corps entre en contact avec le mécanisme, débranchez immédiatement le câble d'alimentation ou éteignez l'interrupteur situé à l'arrière du produit.

Si la batterie n'est pas remplacée correctement, il existe un risque d'explosion. Remplacez-la uniquement avec le même modèle ou un produit équivalent approuvé par le fabricant. Lorsque la batterie est épuisée, veillez à coller du ruban adhésif sur les bornes, à l'isoler et à la jeter de manière adéquate, conformément aux lois et réglementations locales et nationales en vigueur.

Attention

Pièces mobiles dangereuses
Veillez à ce que vos doigts ou toute partie du corps n'entre(nt) pas en contact avec ces pièces. Tirez le levier de la tête d'impression pour arrêter toutes les pièces en movement.

IEC 60417-6057 (2011-05) pour les autres pièces mobiles.

Compliance information

This device complies with Part 15 of the FCC Rules. Operation is subject to the following two conditions: (1) This device may not cause harmful interference, and (2) This device must accept any interference received, including interference that may cause undesired operation.

This equipment has been tested and found to comply with the limits for a Class A digital device pursuant to Part 15 of the FCC Rules. These limits are designed to provide reasonable protection against harmful interference when the equipment is operated in a commercial environment. This equipment generates uses, and can radiate radio frequency energy and, if not installed and used in accordance with the instruction manual, may cause harmful interference to radio communications. Operation of this equipment in a residential area is likely to cause harmful interference in which case the user will be required to correct the interference at his own expense.

Caution: Exposure to Radio Frequency Radiation.
To comply with FCC RF exposure compliance requirements, a separation distance of at least 20 cm must be maintained between the antenna of this device and all persons.

Caution: Any Changes or modifications not expressly approved by the manufacturer could void the user's authority to operate the equipment.

Class A Digital Device: Wired Device
This Apparatus complies with class “A” limits for radio interference as specified in the Canadian department of communications radio interference regulations.

This Class A digital apparatus complies with Canadian ICES-003.

Informations de conformité

Appareil numérique de classe A: appareil filaire
Get appareil est conforme aux normes class “A” d’interference radio tel que specifier par ministre canadien des communications dans les reglements d’interference radio.

Cet appareil numérique de la classe A est conform à la norme NMB-003 du Canada.

Waste Electrical and Electric Equipment (WEEE)



This marking shown on the product or its literature, indicates that is should not be disposed with other household wastes at the end of its working life, To prevent possible harm to the environment or human health from uncontrolled waste disposal, please separate this from other types of wastes and recycle it responsibly to promote the sustainable reuse of material resources. Household users should contact either the retailer where they purchased this product, or their local government office, for details of where and how they can take this item for environmentally safe recycling. Business users should contact their supplier and check the terms and conditions of the purchase contract. This product should not be mixed with other commercial wastes for disposal.

WARNING & CAUTION

It describes death, physical injuries, serious financial losses, and damage to data etc. that can be caused to the user.

Do not connect multiple products to one single power outlet. Do not connect the product to a loose power outlet.
Use only power outlets that meet the standard. Connect the power cord only to a grounded power outlet. **Noncompliance may cause electric shock or fire.**



Use only authentic products from BIXOLON. **The company will not provide post-sale support for damage or other quality issues that any fake (refurbished) products may incur.**



Do not bend or strain the power cord excessively. Push the power cord all the way into the power outlet lest it remain loose. Make sure to hold the cord tight when separating it from the power outlet. Do not remove the power cord while the product is in use. **Noncompliance may cause electric shock or fire.**

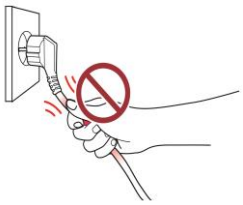

Keep small accessories or other packaging materials away from young children. Beware: children may swallow them.
Mishandling the product may incur injuries. If a child has swallowed any such thing, see a doctor at once.





Do not touch the power cord with wet hands when pulling it from a power outlet.
If the power plug or outlet is smeared with extraneous matter, wipe it with a dry cloth.
Noncompliance may cause electric shock or fire.

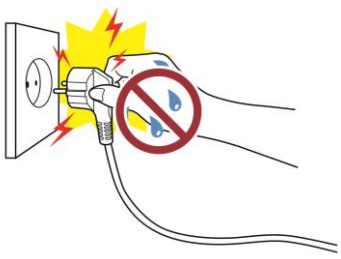

Do not allow the product to be damaged by heavy objects.
Noncompliance may cause electric shock or fire.

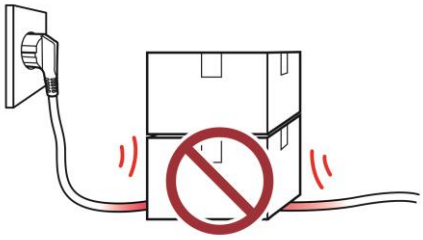

If the product emits a strange sound, burning smell, or smoke, turn off the power immediately and unplug the power cord. If the product is dropped or its exterior is damaged, turn off the power immediately and unplug the power cord. Do not subject the product to shock. **It may start a fire. It may damage the product.**

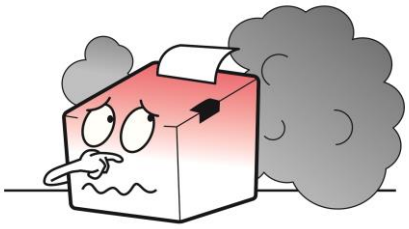

Install the product in a well-ventilated place by keeping it a certain distance from the wall. The product installed in certain places such as where a lot of fine dust is generated, where the temperature is too high or too low, where there is a lot of moisture or water, and at airports or stations that are used continuously for a long time may suffer serious quality problems due to the influence of the surrounding environment. **An increase in internal temperature may start a fire. Be sure to contact the place of purchase before installing the product.**

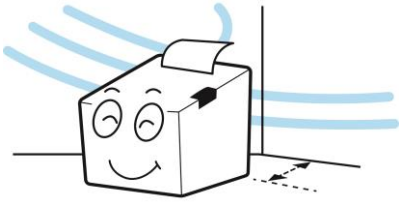

Install the product in a fixed place preventing it from tipping over. When moving the product, turn off the power and disconnect all cables connected to the product, including the power cord. **It may damage the product.**



Never disassemble, repair, or modify the product at your own discretion.
When repair is necessary, contact the place of purchase.



Do not let any foreign substances enter the product. Do not place heavy objects, liquids, or metals on the product. **It may start a fire.**
It may damage the product.



If there is a problem with the product, please contact the place of purchase. In addition, Bixolon website (http://www.bixolon.com) provides product repair.

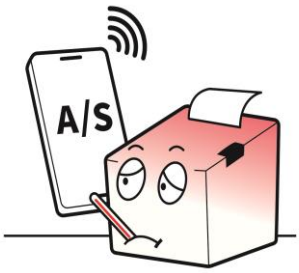

WARNING & CAUTION

It's to use the battery properly and prevent danger or physical damage, so please keep it.

Do not subject the battery to strong impact or throw it. Do not disassemble or modify the battery.
Do not allow battery leakage to come into contact with your eyes or skin. Keep the battery out of the reach of children and make sure that children do not swallow it. **Otherwise, it can cause the deterioration of battery performance and lifespan, overheating, rupture, or ignition. If it comes in contact with skin or is swallowed, consult a doctor immediately.**



If the battery is not to be used for a long time, disconnect it from the device being used and keep it in a dry place. Even if it is not used for a long time, charge it at least once every 6 months while in storage. Do not place the battery in places exposed to high temperatures (direct sunlight, inside a car, etc.) or where static electricity is generated (near home appliances, etc.), or near heat generating devices (heating device, etc.). Do not put the battery in a fire, microwave, or high pressure (pressure cooker, etc.). Make sure that the product does not come in contact with metals (coins, necklaces, etc.) or liquids (water, salt water, etc.). Stop using the battery if it develops an odor or any other abnormalities such as heat, discoloration, deformation, or leakage while using, storing, or charging the battery.



Do not be confused about the (+) and (-) terminals of the battery. Do not let metal contact the (+) and (-) terminals of the battery. If the (+) and (-) terminals of the battery are smeared with extraneous matter, wipe them clean with a piece of dry cloth. **Otherwise, it can cause deterioration of battery performance and lifespan, overheating, rupture, or ignition.**



The battery should only be charged using the adapter or charger provided by Bixolon, and if charging fails after the specified charging time (6 hours), stop charging. Do not charge the product longer than the charging time specified in this manual. **Otherwise, it can cause deterioration of battery performance and lifespan, overheating, rupture, or ignition.**



Store and use the battery within the proper operating temperature range.
- Charging: 0 - 40℃ (32 - 104℉)
- In use: -15 - 50℃ (5 - 122℉)
- Long-term storage (more than 30 days)
  : 15 - 40℃ (5 - 104℉)

Otherwise, it can cause deterioration of battery performance and lifespan, overheating, rupture, or ignition.

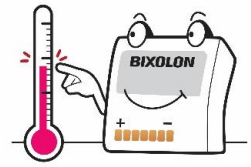

Be sure to turn off the power of the device the battery serves after use. When disposing of the battery, completely discharge the battery and insulate the terminals with tape, etc.
Dispose of it in a designated place according to the relevant laws and regulations of the country.

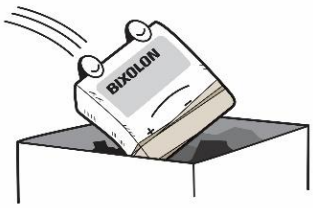

Manual Introduction

The manual provides basic information on the printer and describes how to install, use, and inspect it. To ensure your safety and prevent damage to your property, make sure you read the manual thoroughly before using the machine.

Manual Symbol Introduction

• **Precaution & Warning**



It describes death, physical injuries, serious financial losses, and damage to data etc. that can be caused to the user.

• **Note**



It provides additional information on the function and performance of the product.

Product Introduction

The XM5-30 is a rugged, mid-tier 3-inch (80 mm) direct thermal mobile label printer engineered for durability and high-performance in demanding environments. It features a compact, reliable design that is both IP54-rated and MIL-STD-810G certified, having been proven to withstand drops of up to 2.5 m(8.2 ft.) and 1,500 tumbles from a height of 1 m. Equipped with an intuitive LCD display, the printer delivers high-speed output of up to 6 ips (152 mm/sec) at 203 dpi and supports both liner and linerless media for versatile printing. To ensure extended operation, it comes with a standard 3,400 mAh smart battery, with an optional 6,800 mAh high-capacity battery available for long-lasting usage.

The main features of the printer are as follows

- For the main features of printer, refer to the **Product Spec Sheet** available on the Bixolon website (http://www.bixolon.com).

Product Symbol Introduction

	AC (Alternation Current)
	DC (Direct Current)
	USB
	NFC

Label Types Specifications

The labels used on this product are composed of the following materials.

Label Types	Texture
Hot PE Label	PC
Stickier Label	PP
Rating Label, Rating Coating Label, Upper Logo Label	PET

1. Preparation

- If any items are missing, contact the place of purchase.
- The image may differ from the actual product.
- For options and accessories, refer to the **Product Spec Sheet** available on the Bixolon website (http://www.bixolon.com).

1-1 Included in the Box

Product



XM5-30

Standard Components

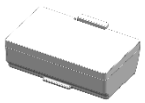

Smart Battery

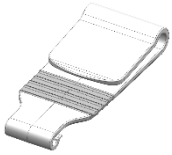

Belt Clip

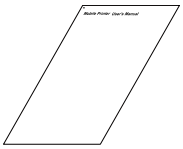

Quick Manual

2. Product Part Names

2-1 Printer Part Names

Front

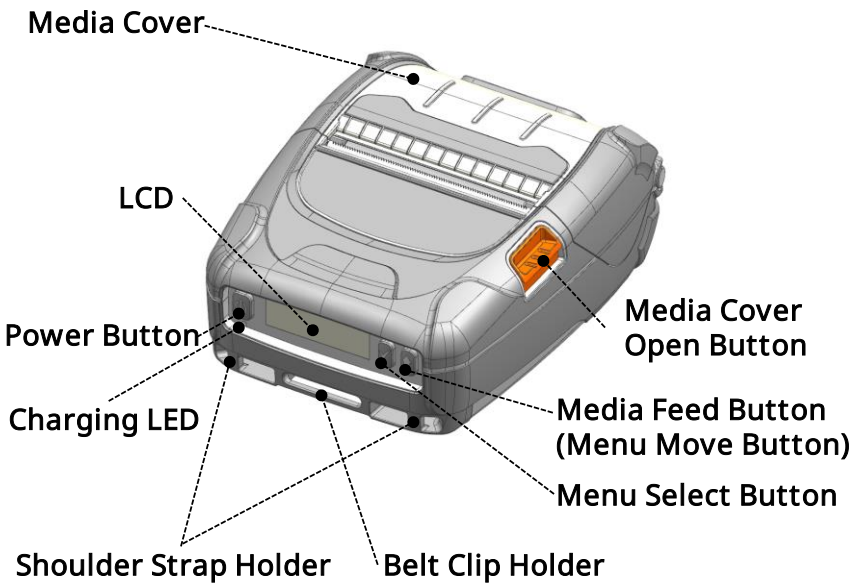

Back

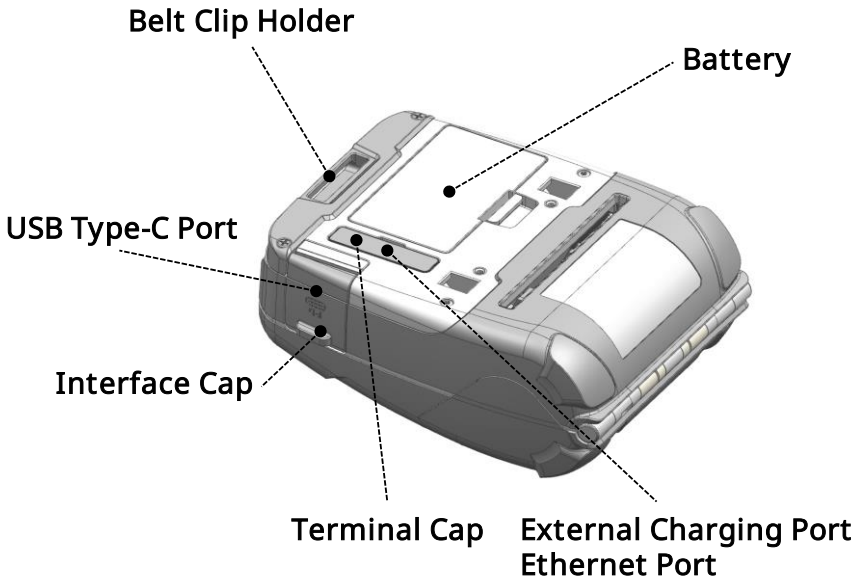

Internal

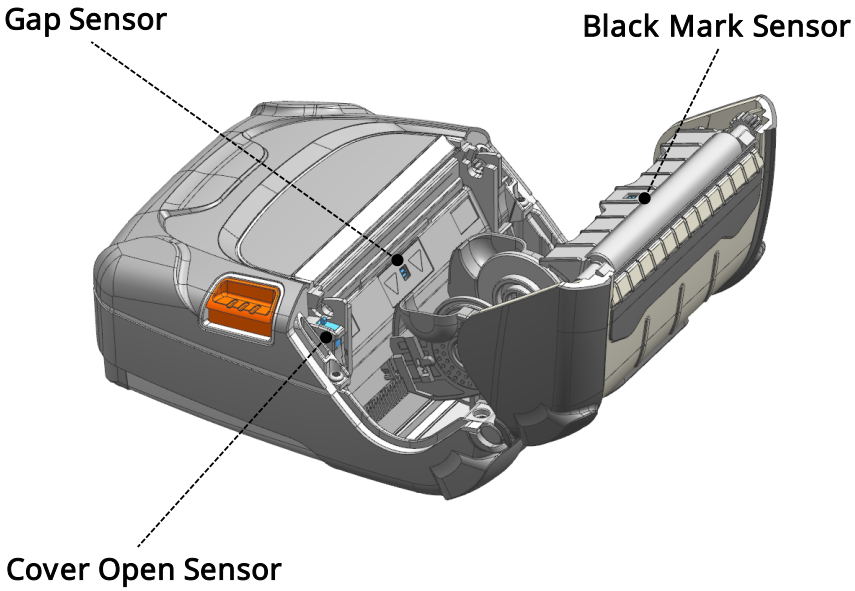

2-2 Interface Part Names

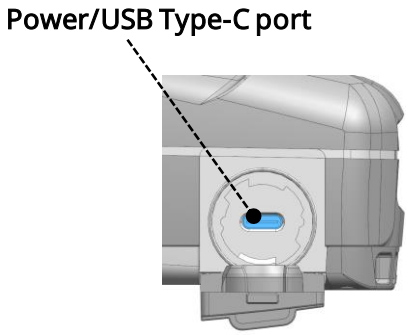

2-3 Control Panel Part Names

You can check printer status and setting information through LCD.

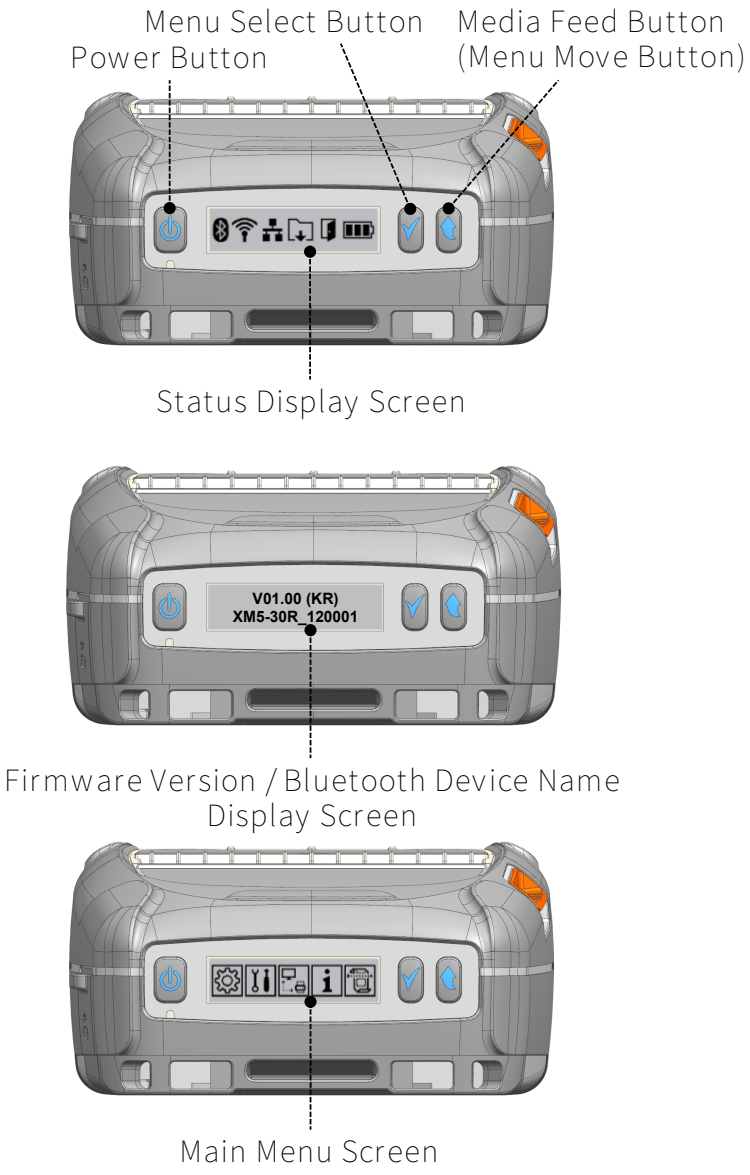

2-3-1 Status icon

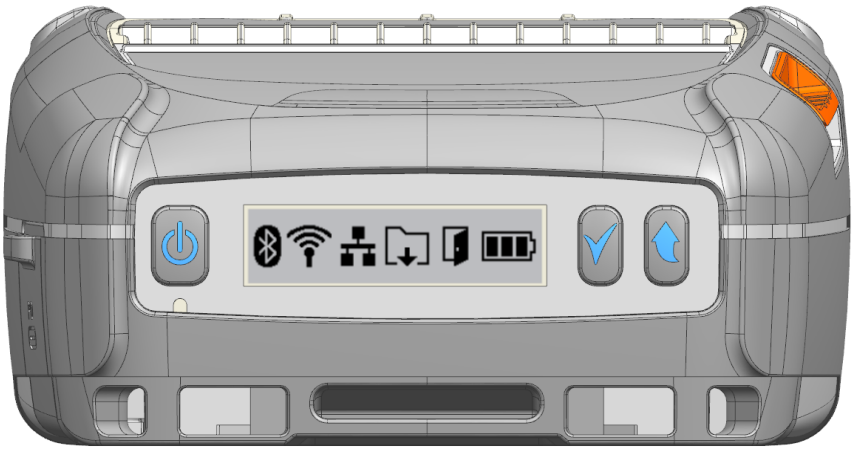

Icon	Description
	Bluetooth is enabled but not connected to the host device
	Bluetooth is enabled and connected to the host device
	Display signal strength of wireless LAN
	Can not searching the registered AP
	Authentication failed
	LAN is enabled and connected
	Receiving data, printing or media feed
	Media empty
	Media cover open
	TPH overheating
	Battery status

2-3-2 Main menu icon

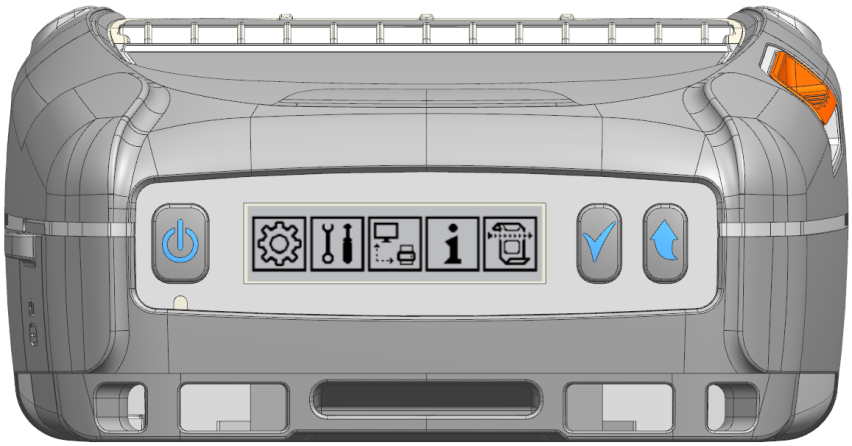

Icon	Description
	Check / set the status of whole printer 1) Interface 2) Media 3) Sensor 4) Powersave 5) Emulation
	Tools 1) Print printer config → Self-test 2) Print test pattern 3) Printer factory reset
	Check / set the status of the interface 1) Bluetooth • On/Off • SSP (Secure Simple Pairing) / PIN code mode setting • BLE / Classic mode setting • Information (Name, MAC address) 2) WLAN • On/Off • Information (SSID, Mode, Encryprtion, IP, Port, MAC address, Inactivity time) • SWC (easy connection to AP by linking with smart connection APP) • Factory reset 3) Ethernet (Optional) • On/Off • Information (IP, Port, MAC address, Inactivity time)

	Check printer information 1) Version • Printer, WLAN, Bluetooth, RFID 2) Bluetooth 3) WLAN 4) Ethernet (Optional) 5) Battery
	Sensor settings 1) Media type • Auto detection / Rear black mark / Front black mark / Gap • Continueous 2) RFID • Setting (Transponder position, Power, Number of retry, Number of label) • Calibration • Information (Band, Valid count, Void count)

2-3-3 Battery warning

Warmomg message	Description
Replace Battery Diminished Consider Replacing	The battery capacity has diminished. Battery replacement is recommended.
Replace Warning Batttery Is Past Useful Life	Battery lifespan has expired. Replace with a new battery.
Poor Replace Battery Shutting Down	Battery abnormality detected. Powering off to protect the system.

2-3-4 Control Panel Button

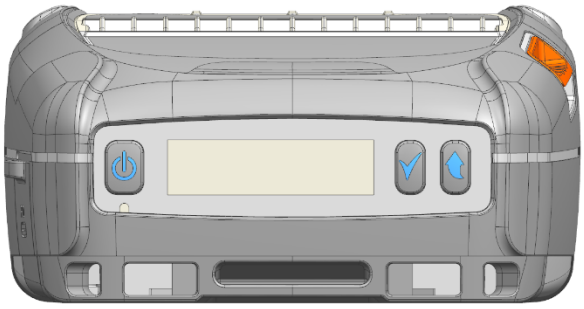

2-3-4-1 Power Button



This button is used to turn the printer on, off, to move to main menu or to operate the action.

1) When the printer is off, press this button for approximately 2 seconds to turn on the power.
2) When the printer is on, press this button for approximately 2 seconds to turn off the power.
3) Pressing this button briefly while navigating the LCD menu returns you to the previous menu.

2-3-4-2 Media Feed Button (Menu Move Button)



This button is used to manually feed media, print a self-test page, or return to the previous step in the LCD menu.

1) Press and hold this button while the printer is booting to Print a self-test page.
2) Press this button in standby mode after booting is complete to feed the media.
3) This button is used to navigate the LCD menu.
   Press this button to move through the LCD menu from left to right or top to bottom.

2-3-4-3 Menu Select Button



1) This button is used to select the LCD menu or to navigate the LCD screen.
2) Press this button to display firmware version and bluetooth device name on the status display screen.
3) Press this button again to display the main menu.
4) Press this button to select the LCD menu or save the selected settings to the printer.

3. Installation & Usage

3-1 Printer Installation and Operating Environment

- **For important safety information, please refer to 'WARNING & CAUTION' for the printer on pages 8–9 and for the battery on page 10.**

3-2 Battery Installation

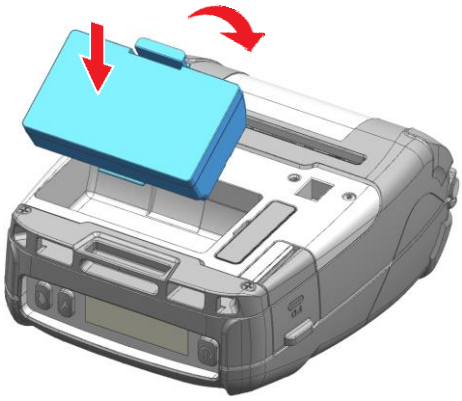

1) Insert the battery in the bottom of the printer, and ensure that you align the battery hook properly.

2) Push the battery into the slot until you hear it snap in place.

- Since the battery is partially changed at the time of purchase, charge the battery prior to product use.
- Use the optional AC/DC PD adapter or the optional Single/Quad battery charger.

- **Install the battery only when the printer is disconnected from power. This can cause serious electrical damage and bodily injury.**
- **Do not operate the printer and power supply in a humid environment. This can cause serious electrical damage and bodily injury.**

3-3 Battery Charging

3-3-1 AC/DC PD Adapter Connection (Optional)

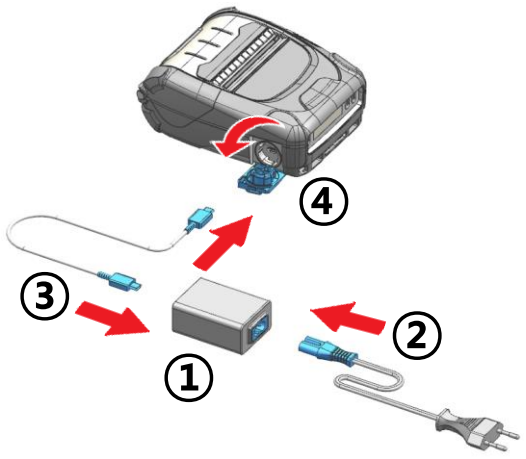

1) Turn off the printer power.

2) Connect the power cord ② to the AC/DC PD Adapter ① and then connect AC power.

3) Connect the USB Cable (C-C) ③ to the AC/DC PD Adapter ①.

4) Open the external interface cap in the direction of ④.

5) Connect the AC/DC PD Adapter to the Power/USB Type-C port of the printer.

3-3-1-1 Charging LED

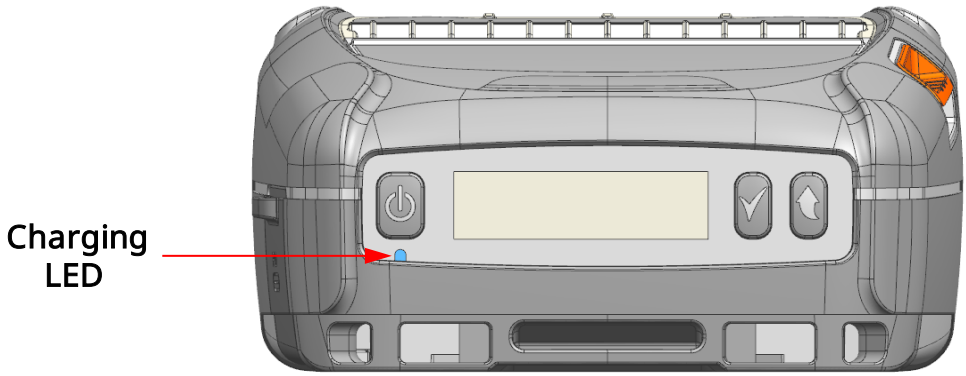

Charging LED	Charging Status	Charging Time
Red LED On	Charging	Within 3 hours
Green LED On	Fully Charged	
Red LED Blinking	Error Replace or Reinstall Battery	

⚠ • Install the battery only when the printer is disconnected from power.
• Use only genuine products supplied by Bixolon. Otherwise, the product may malfunction or there is a risk of personal injury.

3-3-2 Single Battery Charger(Cradle) Usage (Optional)

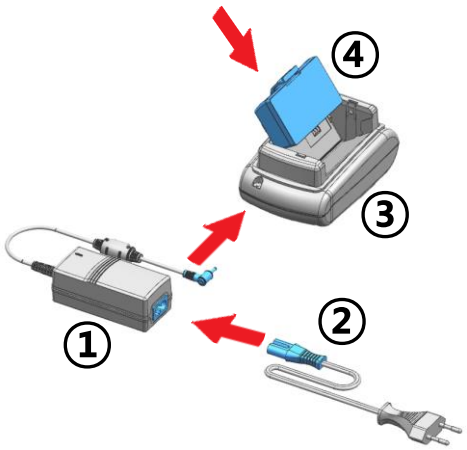

1) Turn off the printer power.

2) Connect the power cord ② to the AC/DC PD Adapter ① and then connect AC power.

3) Connect the USB C to C Cable ③ to the AC/DC PD Adapter ①.

4) Open the external interface cap in the direction of ④.

5) Connect the AC/DC PD Adapter to the USB Type-C port of the printer.

• You must use the battery charger provided by BIXOLON to use the singles battery charger. (AC/DC Adapter is not available)

• Charge the battery only after disconnecting the power to your device.
• Use only genuine products supplied by Bixolon.
Otherwise, the product may malfunction or there is a risk of personal injury.

3-3-3 Quad Battery Charger Usage (Optional)

3-3-3-1 Cables Connection

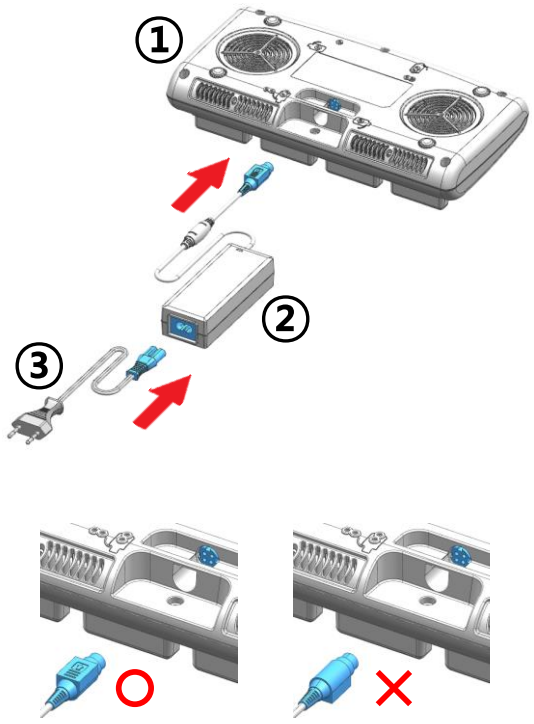

1) Connect the power cord to the Adapter, and connect the Adapter to the power port of the quad battery charger.

2) Plug the power cord into a AC power. Input power is 100 ~ 240 VAC, 50/60 Hz, 1.0 A.

3) When the power is supplied, the yellow, green and red LEDs are on for three seconds and do the self-test.

⚠ • Use only genuine AC/DC adapter supplied by Bixolon. (12 VDC, 3 A) Otherwise, the product may malfunction or there is a risk of personal injury.

3-3-3-2 Battery Charging

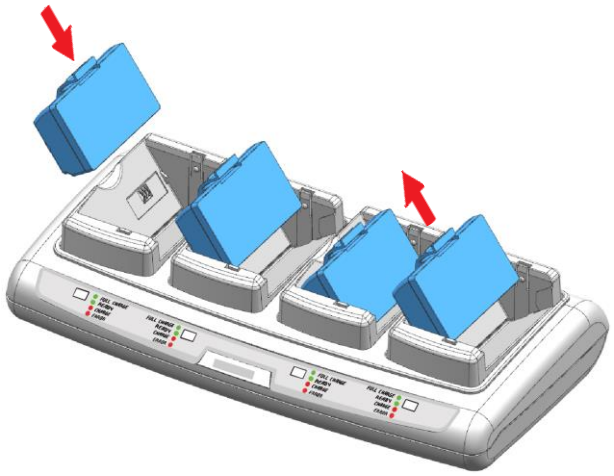

1) Insert the battery into the Quad charger as shown in the figure on the left.

2) Gently slide the battery until it reaches the bottom of the charger.

3) Charging starts as soon as the battery is completely inserted.

4) After charging, remove the battery from the Quad charger.

Charging LED	Charging Status	Charge Time
Red LED On	Charging	Within 4 hours
Green LED Blinking	Over 80% Charged	
Green LED On	Fully Charged	
Red LED Blinking	Error Replace or Reinstall Battery	

- If the red lamp of the charger blinks, install the battery again.
- If the red lamp continues to blink despite several attempts (4 ~ 5 times) to install the battery, contact your local dealer.
- The charging time may vary depending on the type of the charger or ambient temperature.

3-4 Media Installation

3-4-1 Label Media Installation

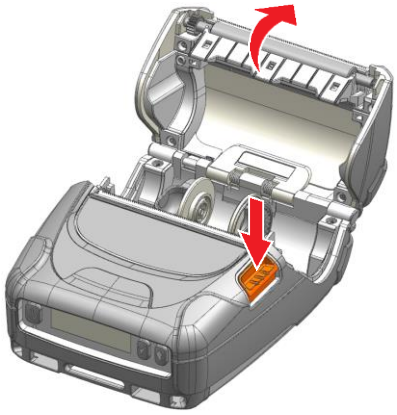

1) Press the Open button to open the media cover.

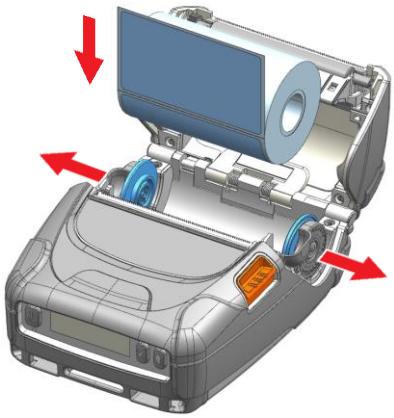

2) Open the media holders as shown, then insert the media.
(Remove the empty media core.)

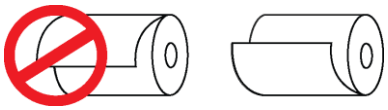

3) Check for correct media orientation when inserting it into the printer.



4) Pull out the media as shown and close the media cover.

3-4-2 Receipt Media Installation

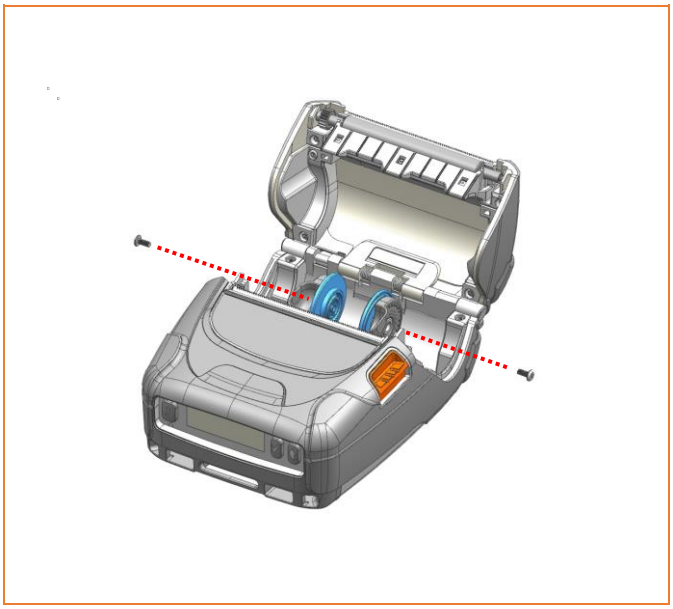

1) The specification of the media inner diameter of the standard media disks are 19 mm (0.75 inch).

2) If you are using media with a smaller inner diameter, remove the media disks as shown in the figure.

- When opening or closing the media cover, be careful not to pinch your fingers.
- Do not open the media cover while the printer is printing. Data loss may occur.

3-5 Linerless Kit Installation (Optional)

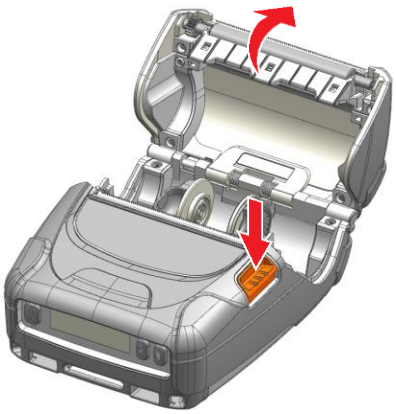

1) Press the Open button to open the media cover.

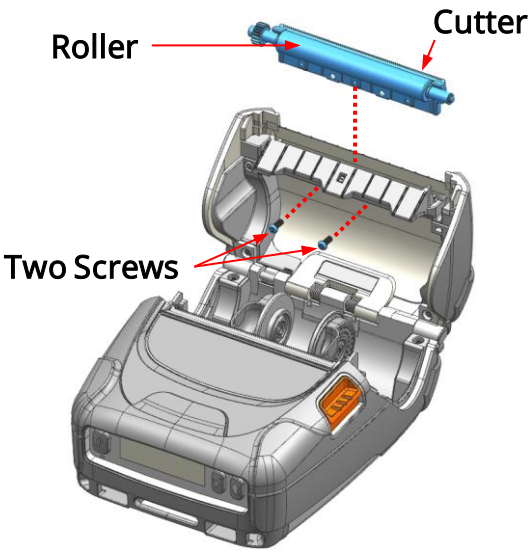

2) Remove two screws.

3) Remove the roller and the cutter together as shown.

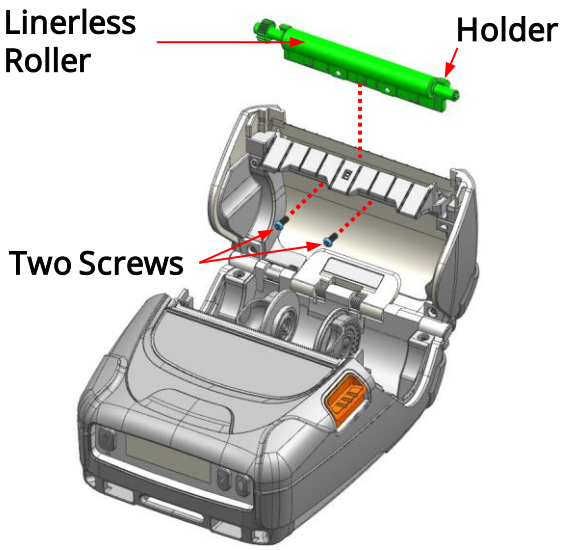

4) Insert the linerless roller and the holder together as shown.

5) Refasten two screws.

3-6 Bluetooth & Wireless LAN Connection



1) The printer can be connected to devices equipped with Bluetooth communication capacity (PDAs, PCs, etc.).

2) Use the Bluetooth connection function supported by the device to connect to the printer. The NFC tag built into the printer enables automatic pairing with devices.

- Tap your host device to logo on the side of the printer for NFC auto pairing. ( )
- The device must support NFC Auto Pairing.
  It may display a message that the device cannot be connected as NFC Auto Pairing is supported up to the Bluetooth pairing and the devices must be connected manually, but this is normal.

3) The printer can be connected to other stations, such as PDAs and PCs supporting wireless LAN communication in Ad-hoc mode, Soft AP mode and AP in Infrastructure mode.

- Refer to the Bluetooth & Wi-Fi Connection Manual for detailed information on its connection.
- You can check the bluetooth environment (authentication, encryption, connection mode) and the wireless LAN environment (IP, SSID, authentication, encryption) via the self-test page.

3-7 Interface Cable Connection

3-7-1 USB Cable Connection (Optional)

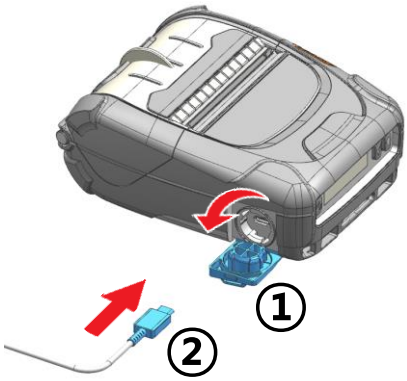

1) Open the Interface Cap ①.

2) Connect the external communication cable ② to the USB Type-C port of the printer.

3) Connect the interface cable to the USB port of the device (PDAs, PCs, etc.).

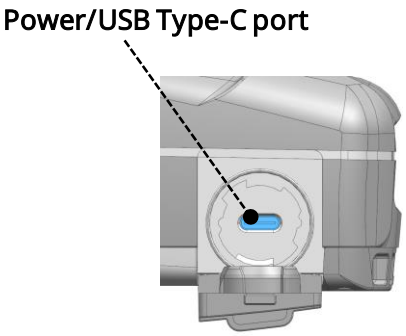

• The interface cable that can be connected to the printer is a USB cables (C-C, A-C) provided by BIXOLON (optional) or a standard USB cables (C-C, A-C).

3-7-2 Fixed USB Cable (C-C) Connection (Optional)

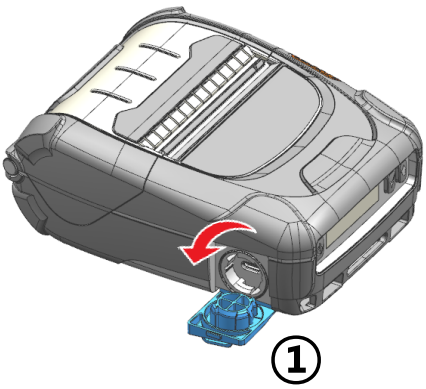

1) Open the Interface Cap ①.

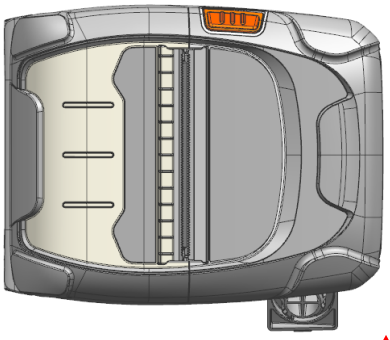

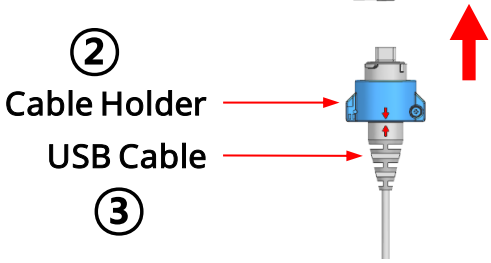

2) Rotate the Cable Holder ② to align the arrows on the USB Cable Holder ② and the Cable ③.

3) Connect the USB Cable ③ to the USB Type-C port of the printer.

4) Fix the USB Cable ③ by tightening the Cable Holder ② until it clicks into place, as shown in the figure.

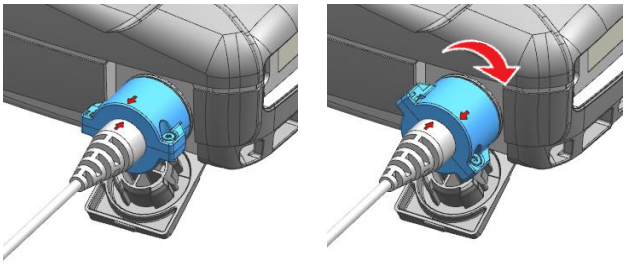

5) Connect the other end of the USB Cable to the USB port of the device (PDAs, PCs, etc.).

• The Fixed USB Cable that can be connected to the printer is Fixed USB Cable (C-C) provided by BIXOLON(optional).

3-8 Belt Clip Usage

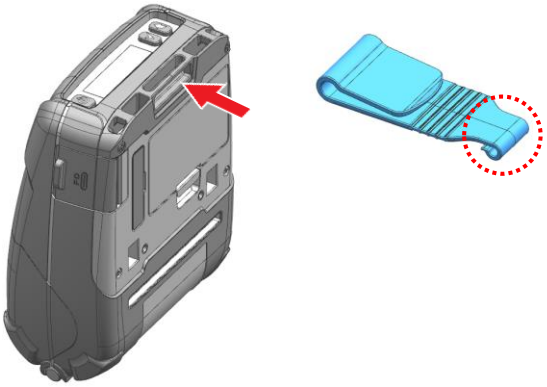

1) Insert the belt clip hook into the belt clip holder as shown in the image.

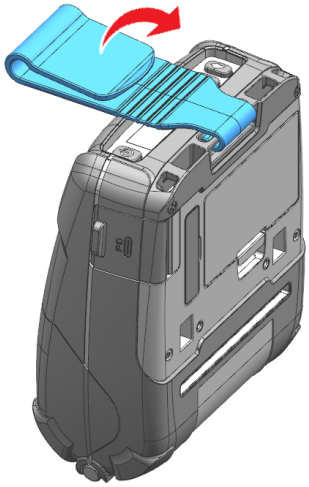

2) Rotate the belt clip as shown in the image.

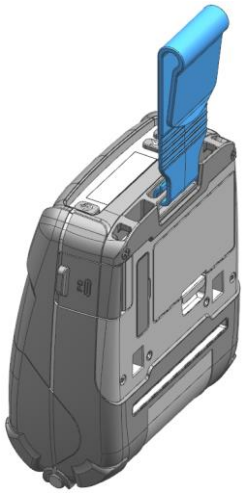

3) Hook the belt clip to the belt.

3-9 Roll Media or Fan-Fold Media Installation

3-9-1 Roll Media Width (“3 INCH” marking): 80 mm (3.15 inch)

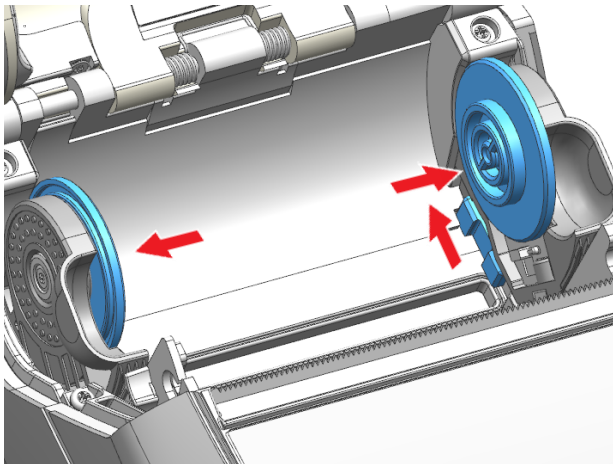

Open the media holders as shown, then push the latch on the right side of the printer to lock them in place.

3-9-2 Fan-fold Media Width (“FANFOLD” marking): 82 mm (3.22 inch)

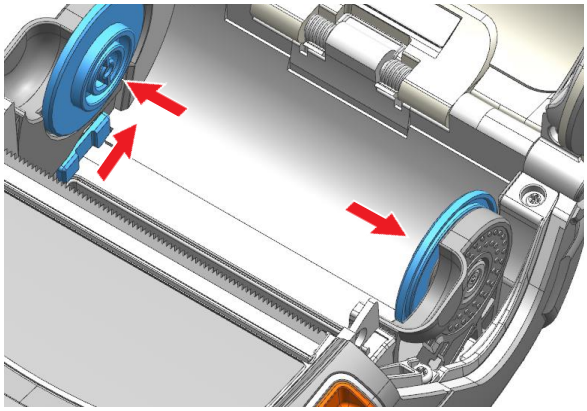

Open the media holders as shown, then push the latch on the left side of the printer to lock them in place.

3-9-3 Fan-fold Media Width: 28~76 mm (1.10~2.99 inch)

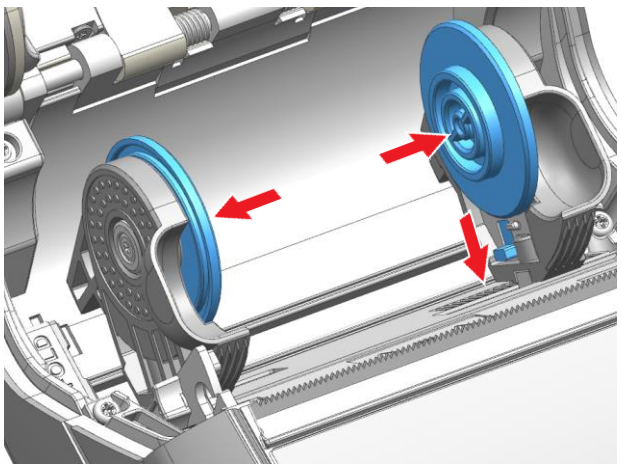

Open the media holders as shown, then push the latch on the right media holder to lock them in place.

4. Self-Test

Run the self-test to check the setting information when you are setting up the printer for the first time or if there is a problem.

If no issue is found with the printer after running the self-test, examine the other devices or peripherals and software. This function is independent of such other devices and software.

4-1 Self-Test Instructions

1) Turn the printer power on and go to the [Tool] > [Print printer config] menu on the LCD

2) Press the select button to run the self-test.

3) The printer settings information is printed on the first page, and the wireless interface information is printed on the next page.

4) After the wireless interface information is printed, the self-test is automatically terminated.

4-2 Self-Test Sample

BIXOLON XM5-30 CONFIGURATION

FIRMWARE VERSION	: V01.00 STD 010126
LANGUAGE	: STANDARD
EMULATION	: SLCS & BPL-Z & BPL-C
PRINT DARKNESS	: 10/30
PRINT SPEED	: 6 IPS
TEAR OFF VALUE	: +000 DOT
TEAR OPTION	: TEAR-OFF
PRINT OFFSET	: +0000 DOT
POWER-UP ACTION	: NO ACTION
MEDIA TYPE	: GAP PAPER
SENSOR TYPE	: AUTO
LABEL LENGTH	: 1200 DOT
LABEL WIDTH	: 576 DOT
BAUD RATE	: 115200
PARITY	: NONE
DATA BIT(S)	: 8
STOP BIT(S)	: 1
HAND SHAKING	: HARDWARE
SERIAL NUMBER	: STDCJYKA26090001
BPL-Z CODEPAGE	: CP-1252
SLCS CODEPAGE	: WCP1252-LATIN1
SLCS ICS	: U.S.A
POWER OFF TIME	: 15 MIN
IDLE TIME	: 30 SEC
SMART BATTERYT	: PRESENT

CONFIGURATION CONTROL STATUS

SPEED	: COMMAND
DARKNESS	: COMMAND
WIDTH	: COMMAND
OFFSET	: COMMAND
TEAR OFF	: COMMAND
MEDIA TYPE	: COMMAND
LANGUAGE	: COMMAND

RF INTERFACE STATUS (BT)

BLUETOOTH F/W VER :
MAC ADDRESS :



401920000001

FRIENDLY NAME	: XM5-30_000001
MODE	: CLASSIC (iOS Support)
AUTH & ENCRYPT	: ENABLED
CONNECTION MODE	: 2
PAIRING MODE	: SSP (NUMERIC COMPARISON)

RF INTERFACE STATUS (WLAN)

WLAN F/W VER :
MAC ADDRESS :



001594000001

SYSTEM NAME	: XM5-30
NETWORK MODE	: SOFT AP
FREQUENCY	: 2.4GHZ
AUTHENTICATION	: OPEN
ENCRYPTION	: NONE
ESSID	: PRINTER_000001
DHCP	: ENABLED
IP ADDRESS	: 192.168.1.1
NETMASK	: 255.255.255.0
GATEWAY	: 192.168.1.2
PORT	: 9100
INACTIVITY TIME	: 10 SEC

5. Maintenance

5-1 Printer Cleaning

Accumulated dust or debris inside the printer may degrade print quality.

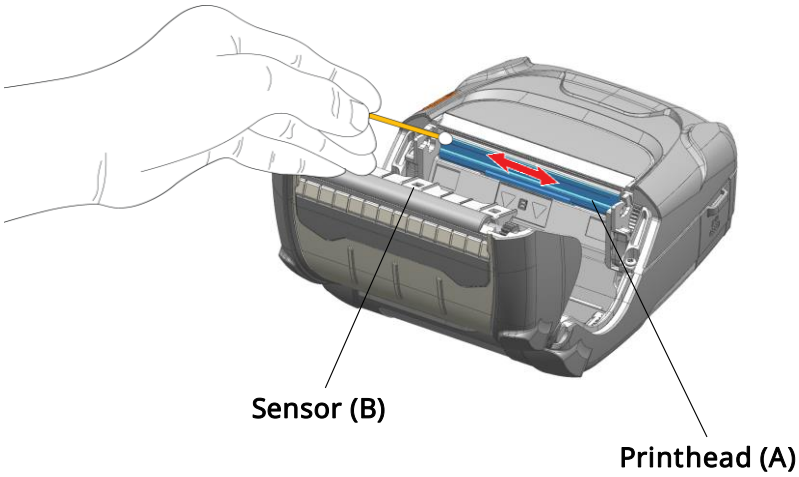

1) Turn off the printer and disconnect all cables from the product.
2) Open the media cover and remove any media inside.
3) Clean the printhead (A) using the cloth or cotton swab soaked in alcohol for medical.
4) Using the cloth or cotton swab soaked in alcohol for medical, remove the media dust from the black mark sensor (B).
   (Sensor could be located in the middle or on left or on right)
5) Do not use the printer for one to two minutes after cleaning until the alcohol for medical has completely evaporated and dried.
6) Insert the media and close the media cover.

- **The head is very hot while the printer is running.**
  When cleaning the head, be careful not to touch the heating part of the head with your hands.
- **The head may be damaged by static electricity, etc.**
- **Be careful not to scratch the head.**
- **Be sure to use only genuine linerless media supplied by Bixolon.**
  Otherwise, post-sale support may not be available.
- **Be sure to turn off the power before you proceed with cleaning.**
- **When using linerless media, clean the head periodically after using 4 rolls of media (100 m) or at least once a week. Otherwise, the product may fail and print quality may be compromised.**

6. Specifications

6-1 Printer Specifications

- For detailed information on Printer Specifications, refer to the **Product Spec Sheet** available on the Bixolon website (http://www.bixolon.com).

6-2 Recommended Media

- For detailed information on Recommended Media, refer to the **Mobile Media Specification** available on the Bixolon website (http://www.bixolon.com).

Revision History

Ver.	Date	Description
2.00	09-28-2026	New