BIXOLON

User's Manual

SPP-R310/L310/R310U

MOBILE PRINTER

Ver. 2.00



www.bixolon.com

Table of Contents

Copyright 4
WARNING & CAUTION 8
Manual Introduction 11
Product Introduction 12
The main features of the printer are as follows 12

1. Preparation 14
1-1 Included in the Box (SPP-R310/L310) 14
1-2 Included in the Box (SPP-R310U) 14

2. Product Part Names 15
2-1 Printer Part Names 15
2-2 Interface Part Names (SPP-R310/L310) 16
2-3 Interface Part Names (SPP-R310U only) 16
2-4 Control Panel Part Names (SPP-R310/L310) 17
2-5 Control Panel Part Names (SPP-R310U) 19

3. Installation & Usage 21
3-1 Printer Installation and Operating Environment 21
3-2 Battery Installation 21
3-3 Battery Charging 22
3-3-1 AC/DC Battery Charger Connection (SPP-R310/L310) 22
3-3-2 AC/DC PD Adapter Connection (Optional, SPP-R310U) 23
3-3-3 Single Battery Charger(Cradle) Usage (Optional) 24
3-3-4 Quad Battery Charger Usage (Optional) 25
3-3-5 Using Vehicle Adapter (Optional, SPP-R310/L310) 27
3-4 Media Installation 28
3-5 Bluetooth & Wireless LAN Connection 29
3-6 Interface Cable Connection (SPP-R310/L310) 30
3-7 Interface Cable Connection (SPP-R310U) 31
3-8 Belt Clip Usage 32
3-9 Belt Strap Usage (Optional) 33
3-10 Detachable Media Holder Usage (Optional, SPP-L310) 34
3-11 MSR Usage (Optional, SPP-R310) 35

4. Self-Test 36
4-1 Self-Test Instructions 36
4-2 Self-Test Sample (SPP-R310/R310U) 37
4-3 Self-Test Sample (SPP-L310) 39

5. Label Printing Function ····· 40
5-1 Label Function Setting ····· 40
5-1-1 How to set label mode and receipt mode ····· 40
5-2 Auto Calibration Function ····· 41
5-2-1 SPP-R310/R310U Auto Calibration ····· 41
5-2-2 SPP-L310 Auto Calibration ····· 41

6. Maintenance ····· 42
6-1 Printer Cleaning ····· 42

7. Specifications ····· 43
7-1 Printer Specifications ····· 43
7-2 Recommended Media ····· 43

Copyright

© BIXOLON Co., Ltd. All rights reserved.

This user manual and all property of the product are protected under copyright law.
It is strictly prohibited to copy, store, and transmit the whole or any part of the manual and any property of the product without the prior written approval of BIXOLON Co., Ltd.
The information contained herein is designed only for use with this BIXOLON product.
BIXOLON is not responsible for any direct or indirect damages, arising from or related to use of this information.

• The BIXOLON logo is the registered trademark of BIXOLON Co., Ltd.
• All other brand or product names are trademarks of their respective companies or organizations.

BIXOLON maintains ongoing efforts to enhance and upgrade the functions and quality of all our products.
In the following, product specifications and/or user manual content may be changed without prior notice.

Caution

Electronics, such as printers, are prone to damage by static electricity. Therefore, to protect the printer from static electricity, be sure to turn off the printer before connecting or disconnecting the cable to the rear of the printer. If the printer is damaged by static electricity, contact your local dealer.

Warning

Hazardous moving parts
Keep fingers and other body parts away
Pull the print head lever can be stop all moving parts.

IEC 60417-6057 (2011-05) for other moving parts.

Mise en garde

Les appareils électroniques, tels que les imprimantes, risquent d'être endommagés par l'électricité statique. Par conséquent, pour protéger l'imprimante de l'électricité statique, veillez à l'éteindre avant de connecter ou de déconnecter le câble situé à l'arrière de celle-ci. Si l'imprimante est endommagée par l'électricité statique, contactez votre revendeur local

Cet appareil n'est pas adapté d'utilser dans des endroits où des enfants sont probablement d'être présents.

Lorsque l'imprimante fonctionne avec le capot ouvert, ne portez rien qui puisse entrer en contact avec le mécanisme, tel que des vêtements, des colliers, des bagues, des montres ou des certificats d'employé à proximité. Éloignez-vous également de l'imprimante car il est dangereux que certaines parties du corps entrent en contact avec celle-ci. Si un objet ou une partie de votre corps entre en contact avec le mécanisme, débranchez immédiatement le câble d'alimentation ou éteignez l'interrupteur situé à l'arrière du produit.

Si la batterie n'est pas remplacée correctement, il existe un risque d'explosion. Remplacez-la uniquement avec le même modèle ou un produit équivalent approuvé par le fabricant. Lorsque la batterie est épuisée, veillez à coller du ruban adhésif sur les bornes, à l'isoler et à la jeter de manière adéquate, conformément aux lois et réglementations locales et nationales en vigueur.

Attention

Pièces mobiles dangereuses
Veillez à ce que vos doigts ou toute partie du corps n'entre(nt) pas en contact avec ces pièces. Tirez le levier de la tête d'impression pour arrêter toutes les pièces en movement.

IEC 60417-6057 (2011-05) pour les autres pièces mobiles.

Compliance information

This device complies with Part 15 of the FCC Rules. Operation is subject to the following two conditions: (1) This device may not cause harmful interference, and (2) This device must accept any interference received, including interference that may cause undesired operation.

This equipment has been tested and found to comply with the limits for a Class A digital device pursuant to Part 15 of the FCC Rules. These limits are designed to provide reasonable protection against harmful interference when the equipment is operated in a commercial environment. This equipment generates uses, and can radiate radio frequency energy and, if not installed and used in accordance with the instruction manual, may cause harmful interference to radio communications. Operation of this equipment in a residential area is likely to cause harmful interference in which case the user will be required to correct the interference at his own expense.

Caution: Exposure to Radio Frequency Radiation.
To comply with FCC RF exposure compliance requirements, a separation distance of at least 20 cm must be maintained between the antenna of this device and all persons.

Caution: Any Changes or modifications not expressly approved by the manufacturer could void the user's authority to operate the equipment.

Class A Digital Device: Wired Device
This Apparatus complies with class “A” limits for radio interference as specified in the Canadian department of communications radio interference regulations.

This Class A digital apparatus complies with Canadian ICES-003.

Informations de conformité

Appareil numérique de classe A: appareil filaire
Get appareil est conforme aux normes class “A” d’interference radio tel que specifier par ministre canadien des communications dans les reglements d’interference radio.

Cet appareil numérique de la classe A est conform à la norme NMB-003 du Canada.

Waste Electrical and Electric Equipment (WEEE)



This marking shown on the product or its literature, indicates that is should not be disposed with other household wastes at the end of its working life, To prevent possible harm to the environment or human health from uncontrolled waste disposal, please separate this from other types of wastes and recycle it responsibly to promote the sustainable reuse of material resources. Household users should contact either the retailer where they purchased this product, or their local government office, for details of where and how they can take this item for environmentally safe recycling. Business users should contact their supplier and check the terms and conditions of the purchase contract. This product should not be mixed with other commercial wastes for disposal.

WARNING & CAUTION

It describes death, physical injuries, serious financial losses, and damage to data etc. that can be caused to the user.

Do not connect multiple products to one single power outlet. Do not connect the product to a loose power outlet.
Use only power outlets that meet the standard. Connect the power cord only to a grounded power outlet. **Noncompliance may cause electric shock or fire.**



Use only authentic products from BIXOLON. **The company will not provide post-sale support for damage or other quality issues that any fake (refurbished) products may incur.**



Do not bend or strain the power cord excessively. Push the power cord all the way into the power outlet lest it remain loose. Make sure to hold the cord tight when separating it from the power outlet. Do not remove the power cord while the product is in use. **Noncompliance may cause electric shock or fire.**



Keep small accessories or other packaging materials away from young children. Beware: children may swallow them.
Mishandling the product may incur injuries. If a child has swallowed any such thing, see a doctor at once.





Do not touch the power cord with wet hands when pulling it from a power outlet.
If the power plug or outlet is smeared with extraneous matter, wipe it with a dry cloth.
Noncompliance may cause electric shock or fire.

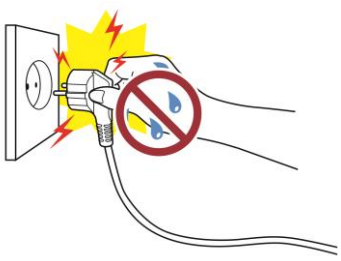

Do not allow the product to be damaged by heavy objects.
Noncompliance may cause electric shock or fire.

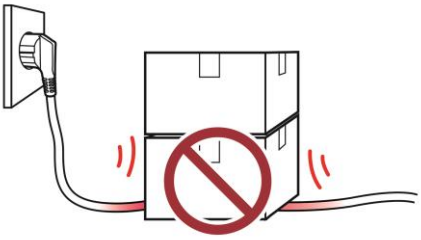

If the product emits a strange sound, burning smell, or smoke, turn off the power immediately and unplug the power cord. If the product is dropped or its exterior is damaged, turn off the power immediately and unplug the power cord. Do not subject the product to shock. **It may start a fire. It may damage the product.**

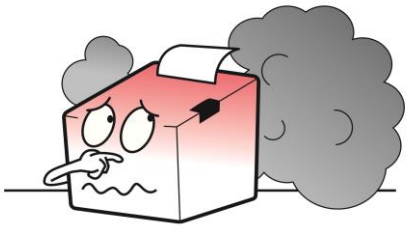

Install the product in a well-ventilated place by keeping it a certain distance from the wall. The product installed in certain places such as where a lot of fine dust is generated, where the temperature is too high or too low, where there is a lot of moisture or water, and at airports or stations that are used continuously for a long time may suffer serious quality problems due to the influence of the surrounding environment. **An increase in internal temperature may start a fire. Be sure to contact the place of purchase before installing the product.**

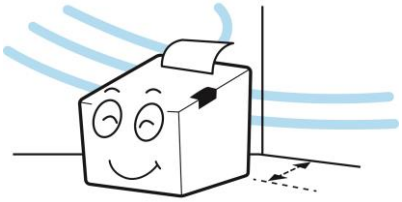

Install the product in a fixed place preventing it from tipping over. When moving the product, turn off the power and disconnect all cables connected to the product, including the power cord. **It may damage the product.**



Never disassemble, repair, or modify the product at your own discretion.
When repair is necessary, contact the place of purchase.



Do not let any foreign substances enter the product. Do not place heavy objects, liquids, or metals on the product. **It may start a fire.**
It may damage the product.



If there is a problem with the product, please contact the place of purchase. In addition, Bixolon website (http://www.bixolon.com) provides product repair.

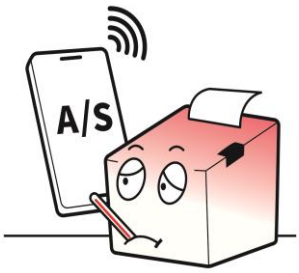

WARNING & CAUTION

It's to use the battery properly and prevent danger or physical damage, so please keep it.

Do not subject the battery to strong impact or throw it. Do not disassemble or modify the battery.
Do not allow battery leakage to come into contact with your eyes or skin. Keep the battery out of the reach of children and make sure that children do not swallow it. **Otherwise, it can cause the deterioration of battery performance and lifespan, overheating, rupture, or ignition. If it comes in contact with skin or is swallowed, consult a doctor immediately.**



If the battery is not to be used for a long time, disconnect it from the device being used and keep it in a dry place. Even if it is not used for a long time, charge it at least once every 6 months while in storage. Do not place the battery in places exposed to high temperatures (direct sunlight, inside a car, etc.) or where static electricity is generated (near home appliances, etc.), or near heat generating devices (heating device, etc.). Do not put the battery in a fire, microwave, or high pressure (pressure cooker, etc.). Make sure that the product does not come in contact with metals (coins, necklaces, etc.) or liquids (water, salt water, etc.). Stop using the battery if it develops an odor or any other abnormalities such as heat, discoloration, deformation, or leakage while using, storing, or charging the battery.



Do not be confused about the (+) and (-) terminals of the battery. Do not let metal contact the (+) and (-) terminals of the battery. If the (+) and (-) terminals of the battery are smeared with extraneous matter, wipe them clean with a piece of dry cloth. **Otherwise, it can cause deterioration of battery performance and lifespan, overheating, rupture, or ignition.**



The battery should only be charged using the adapter or charger provided by Bixolon, and if charging fails after the specified charging time (6 hours), stop charging. Do not charge the product longer than the charging time specified in this manual. **Otherwise, it can cause deterioration of battery performance and lifespan, overheating, rupture, or ignition.**



Store and use the battery within the proper operating temperature range.
- Charging: 0 - 40℃ (32 - 104℉)
- In use: -15 - 50℃ (5 - 122℉)
- Long-term storage (more than 30 days)
  : 15 - 40℃ (5 - 104℉)

Otherwise, it can cause deterioration of battery performance and lifespan, overheating, rupture, or ignition.

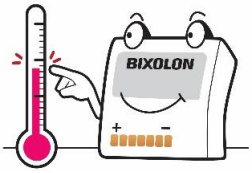

Be sure to turn off the power of the device the battery serves after use. When disposing of the battery, completely discharge the battery and insulate the terminals with tape, etc.
Dispose of it in a designated place according to the relevant laws and regulations of the country.

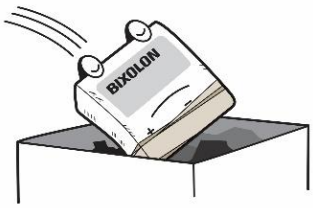

Manual Introduction

The manual provides basic information on the printer and describes how to install, use, and inspect it. To ensure your safety and prevent damage to your property, make sure you read the manual thoroughly before using the machine.

Manual Symbol Introduction

• Precaution & Warning



It describes death, physical injuries, serious financial losses, and damage to data etc. that can be caused to the user.

• Note



It provides additional information on the function and performance of the product.

Product Introduction

Building on the reputation of BIXOLON's mobile printers, the 3-inch SPP-R310 (80 mm) offers a performance feature set and durable design for your field mobility solutions. Supporting media up to 80 mm wide, but still offering a light, ergonomic printer to handle or carry with protection to IP54 and rugged from multiple drops at 1.8 metre. Single button access for drop-in media loading and Easy Bluetooth Pairing™ of other devices via way of the embedded Near Field Communication (NFC) feature. Simple WLAN operation can also be achieved using the printer's Wi-Fi Direct operation. Be it automating your field force, mobilising your Retail workers or equipping your remote workers, the SRP-R310 has your receipt and ticket printing requirements covered.

The ergonomic design of the 3-inch (80 mm) SPP-L310 offers a small form factor, but large feature set for when you need to take label printing on-the-go. Supporting marketing leading programming languages, including BPL-Z™ and BPL-C™, and offering extensive memory for the storage and processing of your many formats, fonts or graphics, the 203 dpi Direct Thermal SPP-L310 provide simple Near Field Communication (NFC) auto-pairing and print speeds of up to 5 ips. Wired or wireless connectivity choices - Serial, USB, Bluetooth (MFi certified) or WLAN and the ability to handle both liner and linerless media ensures that the SPP-L310 can be used for all of your mobile labelling needs. Backed by BIXOLON's two-year warranty guarantee, and supported by its broad range of drivers, utilities and SDKs across various platforms, including Windows, Android and iOS, the SPP-L310 is the mobile worker's chosen brand.

The main features of the printer are as follows



- For the main features of printer, refer to the **Product Spec Sheet** available on the Bixolon website (http://www.bixolon.com).

Product Symbol Introduction

	AC (Alternation Current)
	DC (Direct Current)
	USB
	NFC

Label Types Specifications

The labels used on this product are composed of the following materials.

Label Types	Texture
Hot PE Label, Logo Label	PC
Stickier Label	PP
Rating Label, Paper Label,	PET

1. Preparation

- If any items are missing, contact the place of purchase.
- The image may differ from the actual product.
- For options and accessories, refer to the **Product Spec Sheet** available on the Bixolon website (http://www.bixolon.com).

1-1 Included in the Box (SPP-R310/L310)

Product/ Standard Components



SPP-R310/L310

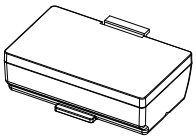

Battery

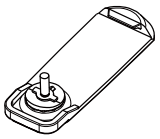

Belt Clip

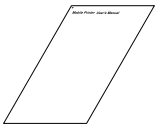

Quick Manual

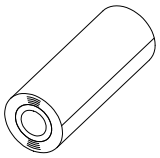

Media
(SPP-R310U)

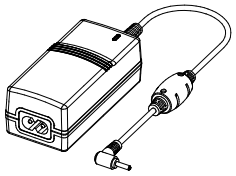

AC/DC
Battery Charger

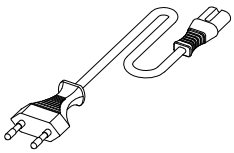

Power Cord

1-2 Included in the Box (SPP-R310U)

Product/ Standard Components



SPP-R310U

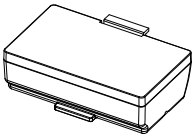

Battery

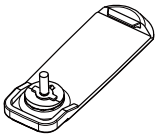

Belt Clip

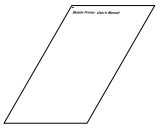

Quick Manual

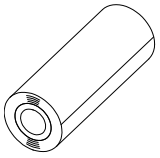

Media
(SPP-R310U)

2. Product Part Names

2-1 Printer Part Names

Front

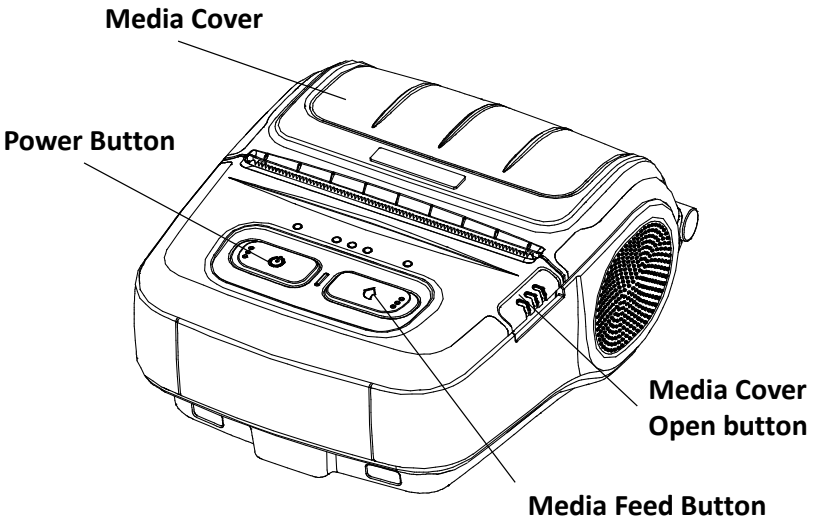

Back

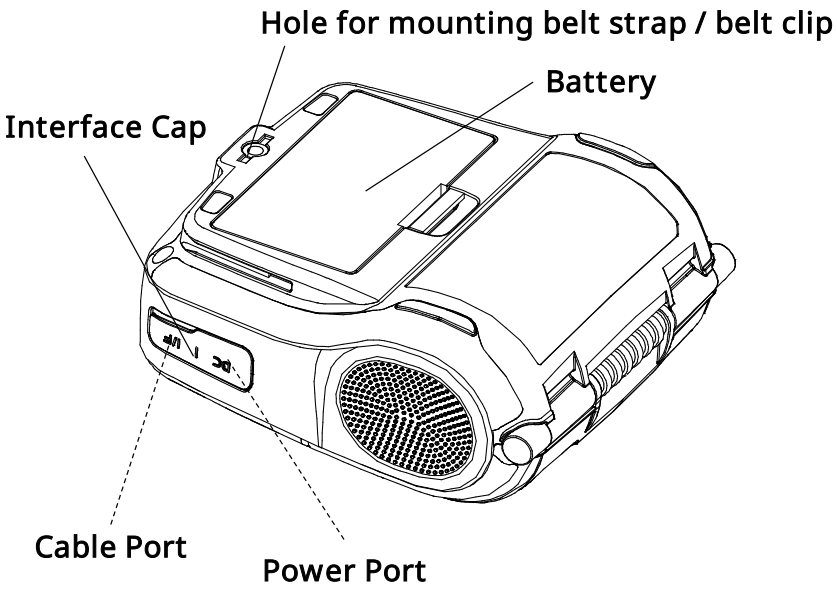

2-2 Interface Part Names (SPP-R310/L310)

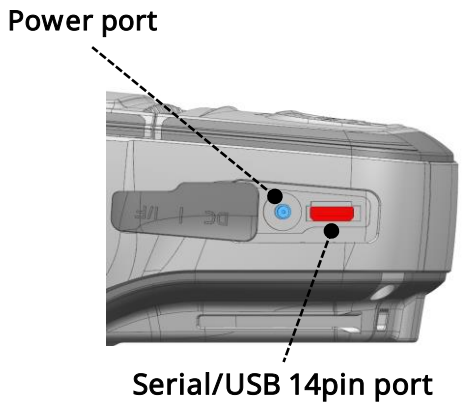

2-3 Interface Part Names (SPP-R310U only)

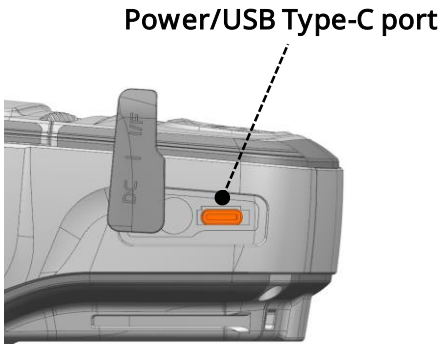

2-4 Control Panel Part Names (SPP-R310/L310)

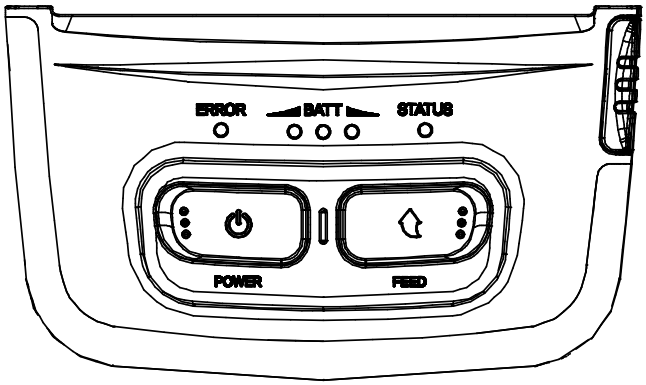

1) Power Button

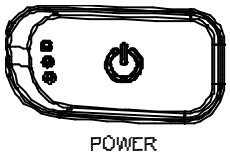

This button is used to turn the printer on and off.
1) When the printer is off, press this button for approximately 2 seconds to turn on the power.
2) When the printer is on, press this button for approximately 2 seconds to turn off the power.

2) Media Feed Button

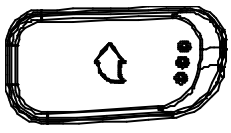

To feed media manually, press this button.
In addition, self-testing and Hexadecimal Dumping can be done.
1) Refer to “4. Self-Test” for self-test information.
2) Refer to the service manual regarding Hexadecimal Dumping.

3) Battery LED (Blue or Red)



1) If three blue LEDs are lit, the battery is fully charged.
2) If two blue LEDs are lit, the battery is half charged.
3) If one blue LED is lit, the battery is at the lowest charge level.
4) If the red LED is lit, the battery must be charged or replaced.

4) Error LED (Left-sided)

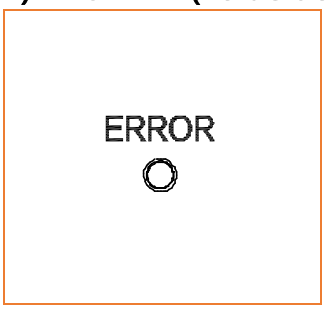

1) If the red LED is lit, the media cover is open.
2) If the red LED is blinking, either the media has been fully used or the print head is overheated. (Replace the roll of media or turn off the printer for at least 10 minutes.)
3) If the red LED continues to blink, it may indicate a more serious problem with the product. Call your authorized service dealer.

5) Status LED (Right-sided)

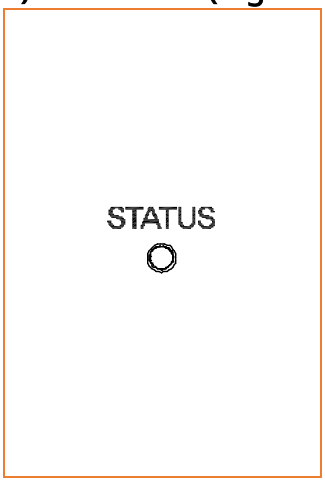

1) When using Bluetooth
   If the printer is ready for wireless communication with any Bluetooth, the green LED as well as the battery status LED is turned on.
2) When using wireless LAN
   The right indicator shows the signal strength from wireless LAN. The green LED blinks for acceptable signal strength while the red lamp blinks for weak signal strength.
3) In power save mode
   In power save mode, only the green LED is lit.

2-5 Control Panel Part Names (SPP-R310U)

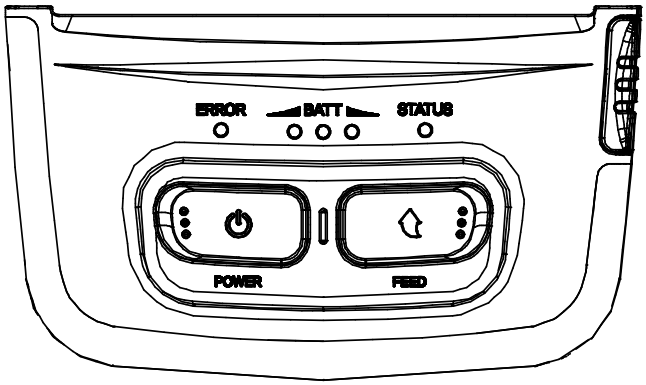

1) Power Button

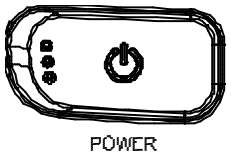

This button is used to turn the printer on and off.
1) When the printer is off, press this button for approximately 2 seconds to turn on the power.
2) When the printer is on, press this button for approximately 2 seconds to turn off the power.

2) Media Feed Button

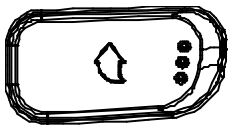

To feed media manually, press this button.
In addition, self-testing and Hexadecimal Dumping can be done.
1) Refer to “4. Self-Test” for self-test information.
2) Refer to the service manual regarding Hexadecimal Dumping.

3) Battery LED (Blue, Green or Red)



1) If three blue LEDs are lit, the battery is fully charged.
2) If two blue LEDs are lit, the battery is half charged.
3) If one blue LED is lit, the battery is at the lowest charge level.
4) If the red LED on the left is lit, the battery must be charged or replaced.
5) If the red LED in the middle is lit, the battery is charging.
6) If the green LED in the middle is lit, the battery is fully charged.
7) If the red LED in the middle is blinking, replace or reinstall the battery.

4) Error LED (Left-sided)

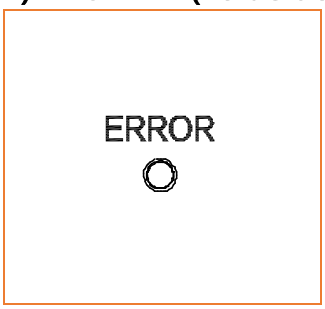

1) If the red LED is lit, the media cover is open.
2) If the red LED is blinking, either the media has been fully used or the print head is overheated. (Replace the roll of media or turn off the printer for at least 10 minutes.)
3) If the red LED continues to blink, it may indicate a more serious problem with the product. Call your authorized service dealer.

5) Status LED (Right-sided)

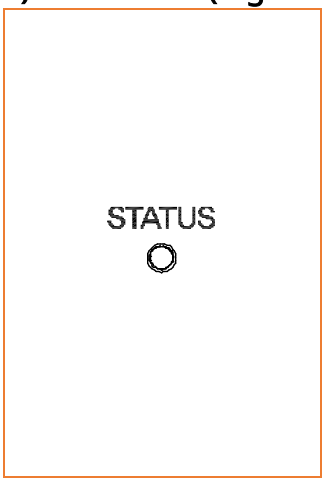

1) When using Bluetooth
   If the printer is ready for wireless communication with any Bluetooth, the green LED as well as the battery status LED is turned on.
2) When using wireless LAN
   The right indicator shows the signal strength from wireless LAN. The green LED blinks for acceptable signal strength while the red lamp blinks for weak signal strength.
3) In power save mode
   In power save mode, only the green LED is lit.

3. Installation & Usage

3-1 Printer Installation and Operating Environment

• For important safety information, please refer to 'WARNING & CAUTION' for the printer on pages 8–9 and for the battery on page 10.

3-2 Battery Installation

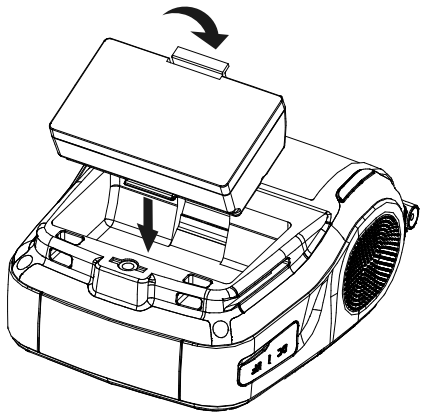

1) Insert the battery in the bottom of the printer, and ensure that you align the battery hook properly.

2) Push the battery into the slot until you hear it snap in place.

• Since the battery is partially changed at the time of purchase, charge the battery prior to product use.
• For the SPP-R310/L310 models, use the included AC/DC battery charger or the optional Single/Quad battery charger.
• For the SPP-R310U model, use the optional AC/DC PD adapter or the optional Single/Quad battery charger.

• Install the battery only when the printer is disconnected from power. This can cause serious electrical damage and bodily injury.
• Do not operate the printer and power supply in a humid environment. This can cause serious electrical damage and bodily injury.

3-3 Battery Charging

3-3-1 AC/DC Battery Charger Connection (SPP-R310/L310)

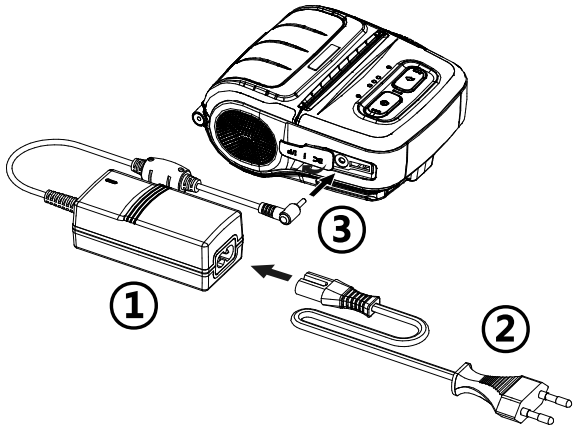

1) Turn off the printer power.

2) Connect the power cord ② to the AC/DC battery charger ①, and then connect AC power.

3) Open the external interface cap in the direction of ③.

4) Connect the battery charger to the power port of the printer.

- Install the battery only when the printer is disconnected from power.
- Use only genuine products supplied by Bixolon. Otherwise, the product may malfunction or there is a risk of personal injury.

3-3-2 AC/DC PD Adapter Connection (Optional, SPP-R310U)

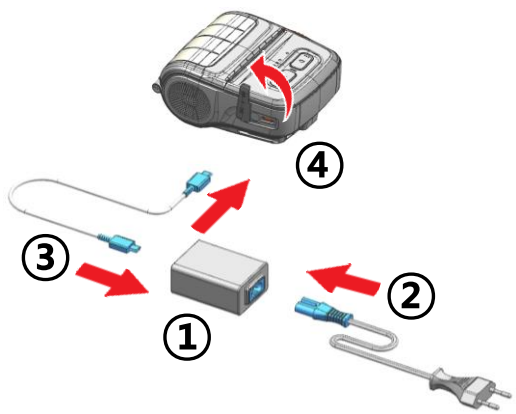

1) Turn off the printer power.

2) Connect the power cord ② to the AC/DC PD Adapter ① and then connect AC power.

3) Connect the USB Cable (C-C) ③ to the AC/DC PD Adapter ①.

4) Open the external interface cap in the direction of ④.

5) Connect the AC/DC PD Adapter to the Power/USB Type-C port of the printer.

3-3-2-1 Charging LED (Center Battery Status LED)

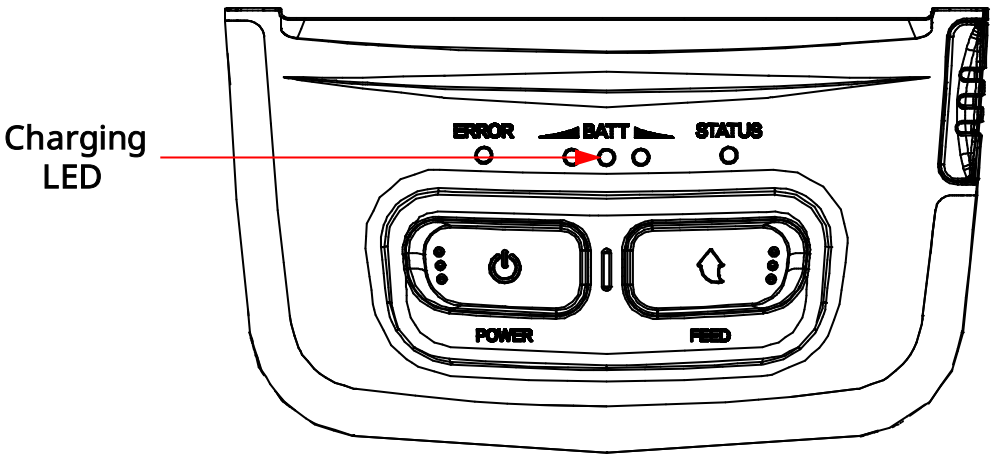

LED	Charge Status	Charge Time
Center red LED On	Charging	Within 3 hours
Center green LED On	Fully Charged	
Center red LED Blinking	Error Replace or Reinstall Battery	

⚠ • Install the battery only when the printer is disconnected from power.
• Use only genuine products supplied by Bixolon. Otherwise, the product may malfunction or there is a risk of personal injury.

3-3-3 Single Battery Charger(Cradle) Usage (Optional)

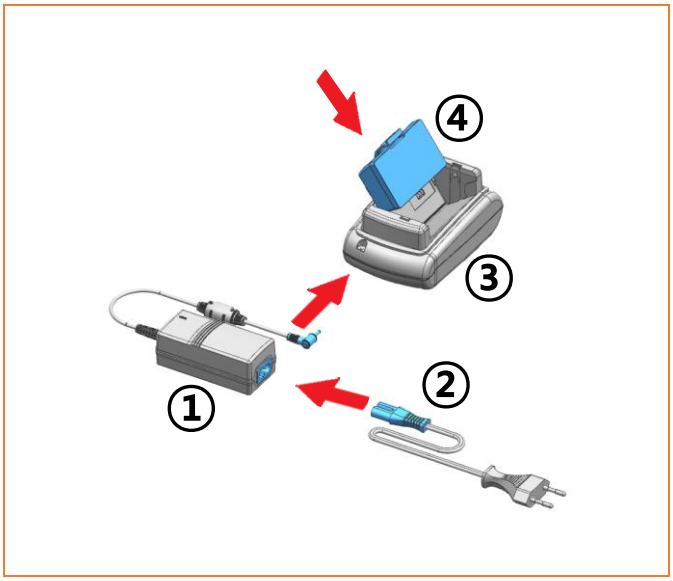

1) Connect the power cord ② to the AC/DC battery charger ①.

2) Connect the battery charger ① to the power port of the single battery cradle ③.

3) Plug the power cord ② into an electrical outlet.

4) Insert the battery ④ into the single battery cradle ③.

• You must use the AC/DC battery charger provided by BIXOLON to use the singles battery charger. (AC/DC Adapter is not available)

• Install the battery only when the printer is disconnected from power.
• Use only genuine products supplied by Bixolon. Otherwise, the product may malfunction or there is a risk of personal injury.

3-3-4 Quad Battery Charger Usage (Optional)

3-3-4-1 Cables Connection

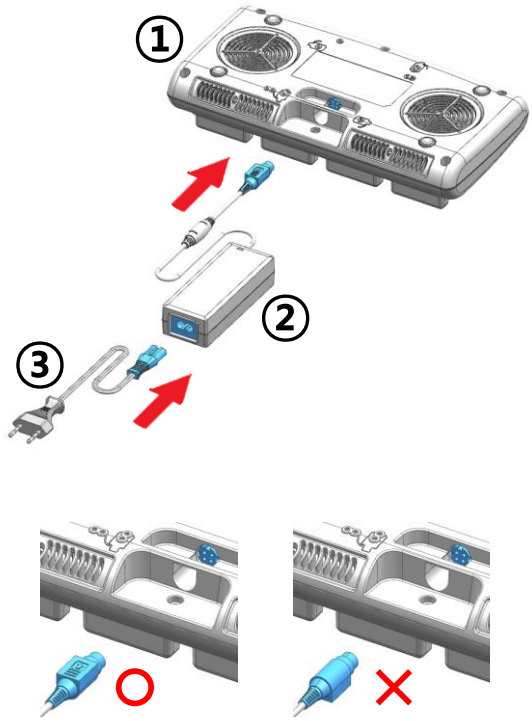

1) Connect the power cord ③ to the AC/DC adapter ②, and connect the AC/DC adapter ② to the power port of the quad battery charger ①.

2) Plug the power cord ③ into a AC power. Input power is 100 ~ 240 VAC, 50/60 Hz, 1A.

3) When the power is supplied, the yellow, green and red LEDs are on for three seconds and do the self-test.

⚠ • Use only genuine AC/DC adapter supplied by Bixolon. (12 VDC, 3 A) Otherwise, the product may malfunction or there is a risk of personal injury.

3-3-4-2 Battery Charging

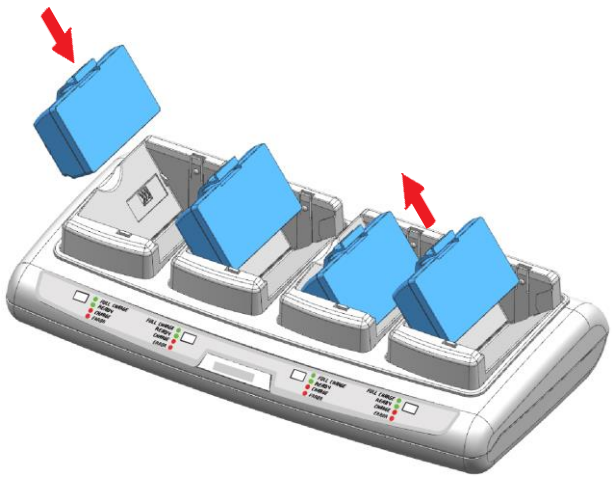

1) Insert the battery into the quad battery charger as shown in the figure on the left.

2) Gently slide the battery until it reaches the bottom of the charger.

3) Charging starts as soon as the battery is completely inserted.

4) After charging, remove the battery from the quad battery charger.

Charging LED	Charging Status	Charge Time
Red LED On	Charging	Within 4 hours
Green LED Blinking	Over 80% Charged	
Green LED On	Fully Charged	
Red LED Blinking	Error Replace or Reinstall Battery	

- If the red lamp of the charger blinks, install the battery again.
- If the red lamp continues to blink despite several attempts (4 ~ 5 times) to install the battery, contact your local dealer.
- The charging time may vary depending on the type of the charger or ambient temperature.

3-3-5 Using Vehicle Adapter (Optional, SPP-R310/L310)

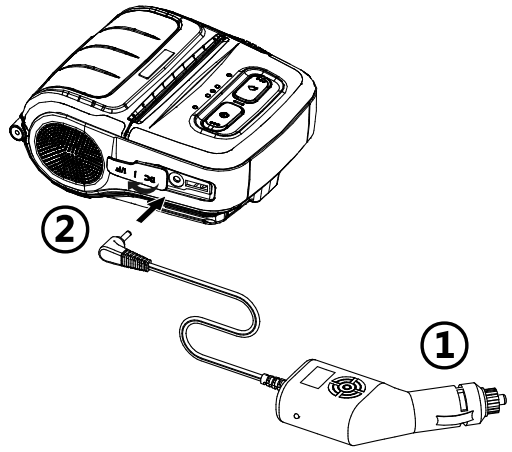

1) Turn off the power to the printer.

2) Connect the vehicle adapter ① to your car's cigarette lighter jack.

3) Open the external interface protection cap in the direction of ②.

4) Connect the vehicle charger to the power connector.

3-4 Media Installation

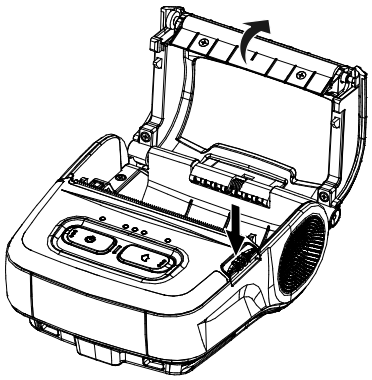

1) Press the Open button to open the media cover.

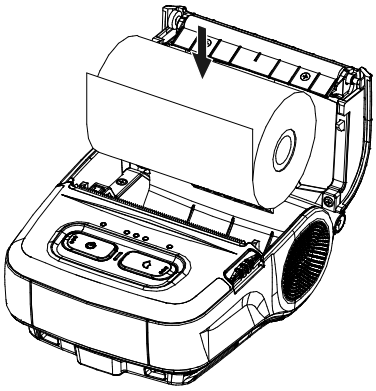

2) Insert the media as shown. (Remove the empty core.)

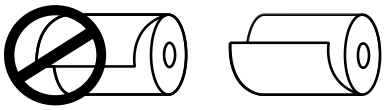

3) Check for correct media orientation when inserting it into the printer.

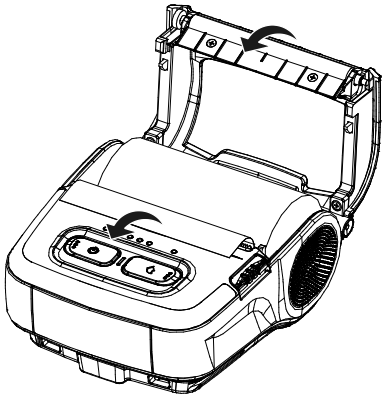

4) Pull out the media as shown and close the media cover.

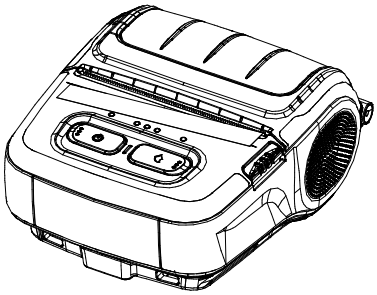

5) Pull and tear off any excess media toward the front of the printer.

3-5 Bluetooth & Wireless LAN Connection

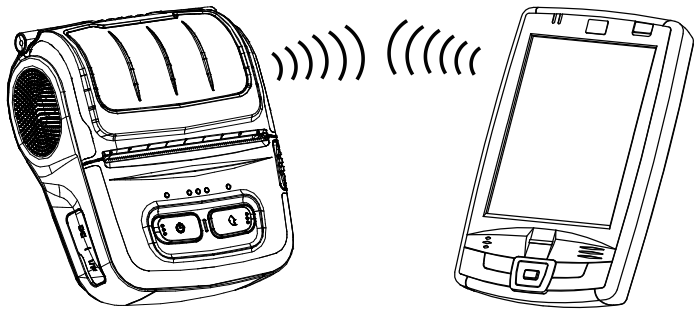

1) The printer can be connected to devices equipped with Bluetooth communication capacity (PDAs, PCs, etc.).

2) Use the Bluetooth connection function supported by the device to connect to the printer. The NFC tag built into the printer enables automatic pairing with devices.

- Tap your host device to logo on the side of the printer for NFC auto pairing. ( )
- The device must support NFC Auto Pairing.
  It may display a message that the device cannot be connected as NFC Auto Pairing is supported up to the Bluetooth pairing and the devices must be connected manually, but this is normal.

3) The printer can be connected to other stations, such as PDAs and PCs supporting wireless LAN communication in Ad-hoc mode, Soft AP mode and AP in Infrastructure mode.

- Refer to the Bluetooth & Wi-Fi Connection Manual for detailed information on its connection.
- You can check the bluetooth environment (authentication, encryption, connection mode) and the wireless LAN environment (IP, SSID, authentication, encryption) via the self-test page.

3-6 Interface Cable Connection (SPP-R310/L310)

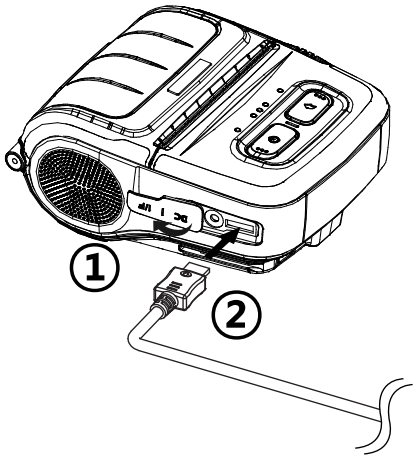

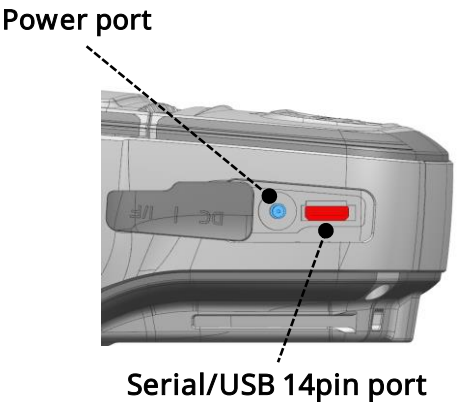

1) Open the Interface Cap ①.

2) Connect the external communication cable ② to the Serial/USB 14pin port of the printer.

3) Connect the interface cable to the serial port or USB port of the device (PDAs, PCs, etc.).

• The interface cable that can be connected to the printer is Serial cable (D-Sub 9P(M)-14P)or USB cable (A-14P) provided by BIXOLON(optional).

3-7 Interface Cable Connection (SPP-R310U)

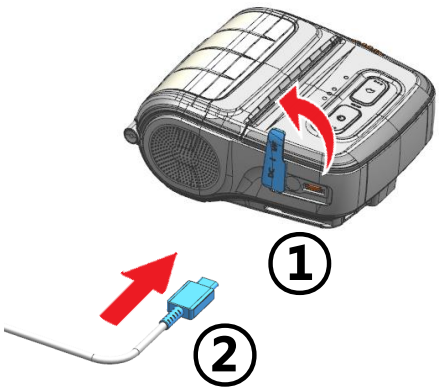

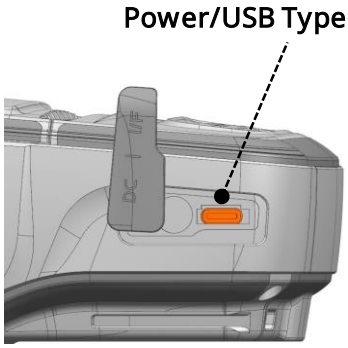

1) Open the Interface Cap ①.

2) Connect the external communication cable ② to the USB Type-C port of the printer.

3) Connect the interface cable to the USB port of the device (PDAs, PCs, etc.).

- The interface cable that can be connected to the printer is a USB cables (C-C, A-C) provided by BIXOLON (optional) or a standard USB cables (C-C, A-C).

3-8 Belt Clip Usage

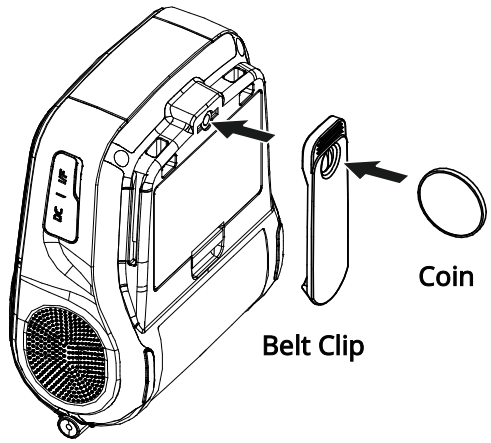

1) Insert the belt clip screw into the printer belt clip mounting hole.

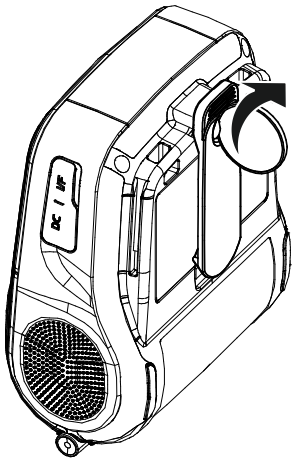

2) Tighten the screw of the belt clip with an object like a coin as shown. (Be careful to tighten the screw in the correct direction.)

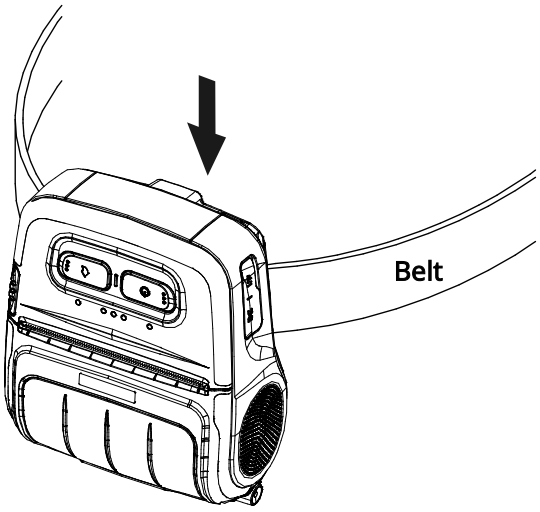

3) Hook the belt clip to the belt.

3-9 Belt Strap Usage (Optional)

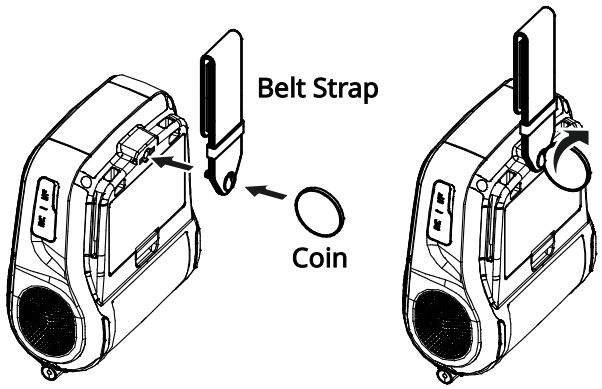

1) Insert the belt strap screw into the printer belt strap mounting hole.

2) Use a coin to tighten the belt strap screw as shown in the image.

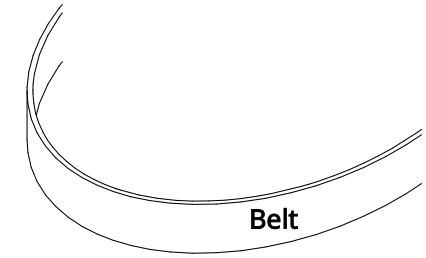

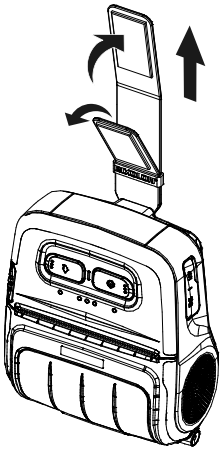

3) Unfasten the belt strap Velcro.

4) Slide the belt strap over a belt.

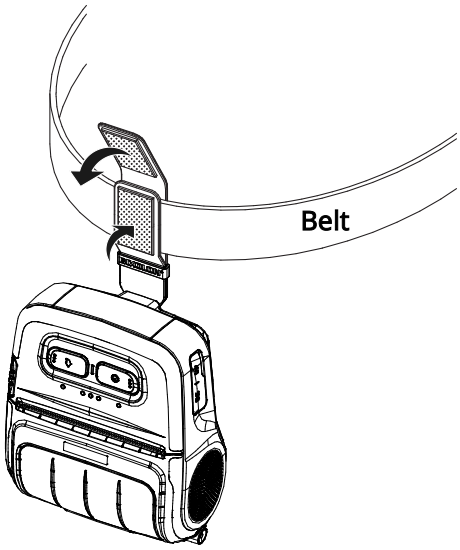

5) Close the Velcro as shown in the figure.

3-10 Detachable Media Holder Usage (Optional, SPP-L310)

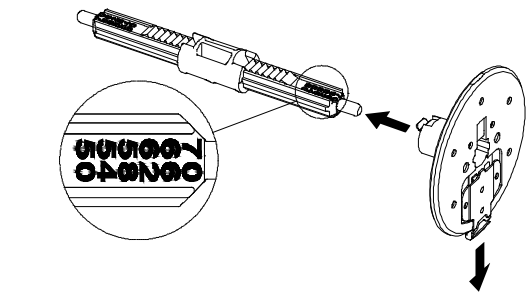

1) Release the disk lock and insert it into the spindle as shown in the picture. (Position the disc so that the media width is equal to the scale on the spindle.)

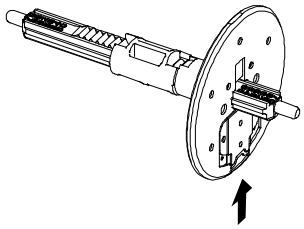

2) After inserting the disc into the spindle, engage the locking device.

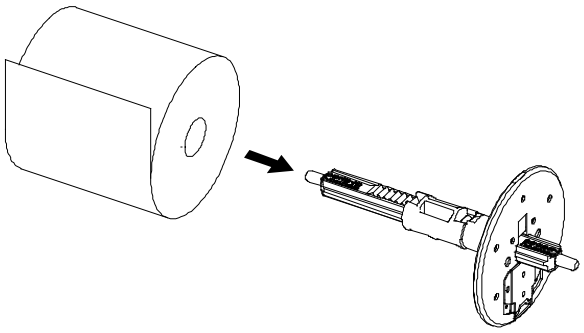

3) Load the media onto the spindle as shown.

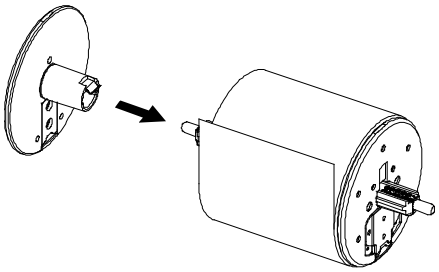

4) After inserting the rest of the disks, fasten the lock.

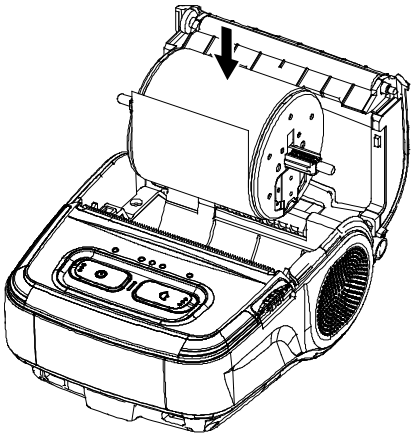

5) Insert the media holder into the printer as shown.

3-11 MSR Usage (Optional, SPP-R310)

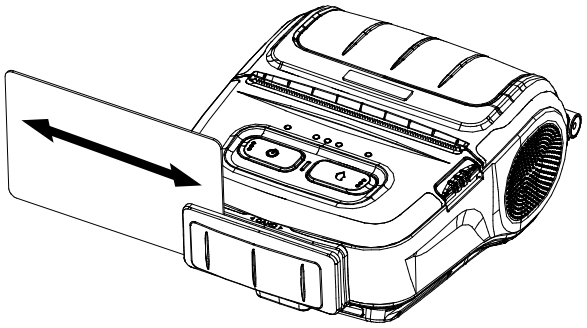

Insert the card as shown in the image and swipe in the direction of the arrow. (can be done in both directions)

- If the card does not register, first check to see if it is properly aligned. When swiping the card, the recommended swiping speed is 100 ~ 1200 mm/sec.

4. Self-Test

Run the self-test to check the setting information when you are setting up the printer for the first time or if there is a problem.

If no issue is found with the printer after running the self-test, examine the other devices or peripherals and software. This function is independent of such other devices and software.

4-1 Self-Test Instructions

1) Turn the printer power off and close the printer media cover.

2) Press and hold the media feed button and power button simultaneously to turn on the printer.

3) After printing begins, release the two buttons.

4) After the information is printed out, the self test is automatically terminated.

4-2 Self-Test Sample (SPP-R310/R310U)

1) Bluetooth

SELF TEST

Firmware version :
V01.00 STOBa 010126
Buffer Capacity : 256K Bytes
USB 2.0 Interface
Serial Interface
- Baud rate : 115200 bps
- Data bits : 8 bits
- Parity : None
- Stop bit : 1 bit
- Handshaking : DTR/DSR

Print Density : 100%
Default Codepage : PC437
- Encoding type : Codepage

Print speed : Max. 100mm/s
Double byte character mode : On
Font : 12x24
Paper out Bell : Off
Low Battery Buzzer : On
Label mode : Off
- sensor type : Transmission
- tear off position : 144 units

Power off time : 15 Min
Idle mode time : 10 Sec
MSR data including sentinel
Character mode : None
MSR read mode : MSR disable
BATT NTC : OK
iOS mode enable

Memory switch setup status

Memory S/W1	Memory S/W2
12345678	12345678
ON ▮	ON
OFF ▮▮ ▮▮▮▮▮	OFF ▮▮▮▮▮▮▮▮
Memory S/W3	**Memory S/W4**
12345678	12345678
ON	ON
OFF ▮▮▮▮▮▮▮▮	OFF ▮▮▮▮▮▮▮▮
Memory S/W5	**Memory S/W6**
12345678	12345678
ON	ON ▮ ▮
OFF ▮▮▮▮▮▮▮▮	OFF ▮ ▮ ▮▮▮▮
Memory S/W7	**Memory S/W8**
12345678	12345678
ON ▮	ON
OFF ▮▮▮▮ ▮▮	OFF ▮▮▮▮▮▮▮▮

RF Interface

BT Embedded
Bluetooth firmware version :
4.0.0
Bluetooth BD address :



4 0 1 9 2 0 0 0 0 0 0 0

- Device name : SPP-R310
- Auth. & Encry. Are enable
- Connection Mode = 2

Not available WLAN

If you want to continue
SELF-TEST printing,
Please press FEED button.

ASCII
!”#$%’()*+,-./0123456789:;⇔?@ABCDEFGHIJKLMNOP
”#$%’()*+,-./0123456789:;⇔?@ABCDEFGHIJKLMNOPQ
#$%’()*+,-./0123456789:;⇔?@ABCDEFGHIJKLMNOPQR
$%’()*+,-./0123456789:;⇔?@ABCDEFGHIJKLMNOPQRS
%’()*+,-./0123456789:;⇔?@ABCDEFGHIJKLMNOPQRST
’()*+,-./0123456789:;⇔?@ABCDEFGHIJKLMNOPQRSTU
()*+,-./0123456789:;⇔?@ABCDEFGHIJKLMNOPQRSTUV
)*+,-./0123456789:;⇔?@ABCDEFGHIJKLMNOPQRSTUVW
*+,-./0123456789:;⇔?@ABCDEFGHIJKLMNOPQRSTUVWX
+,-./0123456789:;⇔?@ABCDEFGHIJKLMNOPQRSTUVWXY
,-./0123456789:;⇔?@ABCDEFGHIJKLMNOPQRSTUVWXYZ
-./0123456789:;⇔?@ABCDEFGHIJKLMNOPQRSTUVWXYZ[
./0123456789:;⇔?@ABCDEFGHIJKLMNOPQRSTUVWXYZ[\
/0123456789:;⇔?@ABCDEFGHIJKLMNOPQRSTUVWXYZ[\]
0123456789:;⇔?@ABCDEFGHIJKLMNOPQRSTUVWXYZ[\]^

PC437
ÇüéâäàåçêëèïîìÄÅÉæÆôöòûùÿÖÜ ¢£¥Pƒáíóúñ№ª¿⌐¬½¼¡«»
üéâäàåçêëèïîìÄÅÉæÆôöòûùÿÖÜ ¢£¥Pƒáíóúñ№ª¿⌐¬½¼¡«»
éâäàåçêëèïîìÄÅÉæÆôöòûùÿÖÜ ¢£¥Pƒáíóúñ№ª¿⌐¬½¼¡«»
âäàåçêëèïîìÄÅÉæÆôöòûùÿÖÜ ¢£¥Pƒáíóúñ№ª¿⌐¬½¼¡«»
äàåçêëèïîìÄÅÉæÆôöòûùÿÖÜ ¢£¥Pƒáíóúñ№ª¿⌐¬½¼¡«»
àåçêëèïîìÄÅÉæÆôöòûùÿÖÜ ¢£¥Pƒáíóúñ№ª¿⌐¬½¼¡«»
åçêëèïîìÄÅÉæÆôöòûùÿÖÜ ¢£¥Pƒáíóúñ№ª¿⌐¬½¼¡«»
çêëèïîìÄÅÉæÆôöòûùÿÖÜ ¢£¥Pƒáíóúñ№ª¿⌐¬½¼¡«»
êëèïîìÄÅÉæÆôöòûùÿÖÜ ¢£¥Pƒáíóúñ№ª¿⌐¬½¼¡«»
ëèïîìÄÅÉæÆôöòûùÿÖÜ ¢£¥Pƒáíóúñ№ª¿⌐¬½¼¡«»
èïîìÄÅÉæÆôöòûùÿÖÜ ¢£¥Pƒáíóúñ№ª¿⌐¬½¼¡«»
ïîìÄÅÉæÆôöòûùÿÖÜ ¢£¥Pƒáíóúñ№ª¿⌐¬½¼¡«»
îìÄÅÉæÆôöòûùÿÖÜ ¢£¥Pƒáíóúñ№ª¿⌐¬½¼¡«»
ìÄÅÉæÆôöòûùÿÖÜ ¢£¥Pƒáíóúñ№ª¿⌐¬½¼¡«»
ÄÅÉæÆôöòûùÿÖÜ ¢£¥Pƒáíóúñ№ª¿⌐¬½¼¡«»

2) WLAN

SELF TEST

```
Firmware version :
    V01.00 STOBa 010126
Buffer Capacity : 256K Bytes
USB 2.0 Interface
Serial Interface
 - Baud rate   : 115200 bps
 - Data bits   : 8 bits
 - Parity      : None
 - Stop bit    : 1 bit
 - Handshaking : DTR/DSR
Print Density : 100%
Default Codepage : PC437
 - Encoding type : Codepage
Print speed : Max. 100mm/s
Double byte character mode : On
Font : 12x24
Paper out Bell : Off
Low Battery Buzzer : On
Label mode : Off
 - sensor type : Transmission
 - tear off position : 144 units
Power off time : 15 Min
Idle mode time : 10 Sec
MSR data including sentinel
Character mode : None
MSR read mode : MSR disable
BATT NTC : OK
```

Memory switch setup status

```
Memory S/W1              Memory S/W2
    12345678                 12345678
ON     ▌                 ON
OFF ▌▌ ▌▌▌▌▌             OFF ▌▌▌▌▌▌▌▌

Memory S/W3              Memory S/W4
    12345678                 12345678
ON                       ON
OFF ▌▌▌▌▌▌▌              OFF ▌▌▌▌▌▌▌▌

Memory S/W5              Memory S/W6
    12345678                 12345678
ON                       ON   ▌ ▌
OFF ▌▌▌▌▌▌▌              OFF ▌ ▌ ▌▌▌▌

Memory S/W7              Memory S/W8
    12345678                 12345678
ON       ▌               ON
OFF ▌▌▌▌ ▌▌              OFF ▌▌▌▌▌▌▌▌
```

RF Interface

```
Not available Bluetooth

WLAN F/W Version : 02.00(1234s)
System Name : SPP-R310
Network Mode : Soft AP
Frequency : (Priority)2.4GHz / 5GHz
Authentication : Open
Encryption     : None
ESSID : PRINTER_000000
DHCP  : Enabled
IP Address  : 192.168.  1.  1
Subnet Mask : 255.255.255.  0
Gateway     : 192.168.  1.  2
Port        : 9100
Inactivity Time : 10
Bonjour     : Disabled
FTP         : Disabled
SNMP        : Disabled
WLAN MAC Address :
```



```
0 0 1 5 9 4 0 0 0 0 0 0

If you want to continue
SELF-TEST printing,
Please press FEED button.


ASCII
!"#$%'()*+,-./0123456789:;⇔?@ABCDEFGHIJKLMNOP
"#$%'()*+,-./0123456789:;⇔?@ABCDEFGHIJKLMNOPQ
#$%'()*+,-./0123456789:;⇔?@ABCDEFGHIJKLMNOPQR
$%'()*+,-./0123456789:;⇔?@ABCDEFGHIJKLMNOPQRS
%'()*+,-./0123456789:;⇔?@ABCDEFGHIJKLMNOPQRST
'()*+,-./0123456789:;⇔?@ABCDEFGHIJKLMNOPQRSTU
()*+,-./0123456789:;⇔?@ABCDEFGHIJKLMNOPQRSTUV
)*+,-./0123456789:;⇔?@ABCDEFGHIJKLMNOPQRSTUVW
*+,-./0123456789:;⇔?@ABCDEFGHIJKLMNOPQRSTUVWX
+,-./0123456789:;⇔?@ABCDEFGHIJKLMNOPQRSTUVWXY
,-./0123456789:;⇔?@ABCDEFGHIJKLMNOPQRSTUVWXYZ
-./0123456789:;⇔?@ABCDEFGHIJKLMNOPQRSTUVWXYZ[
./0123456789:;⇔?@ABCDEFGHIJKLMNOPQRSTUVWXYZ[\
/0123456789:;⇔?@ABCDEFGHIJKLMNOPQRSTUVWXYZ[\]
0123456789:;⇔?@ABCDEFGHIJKLMNOPQRSTUVWXYZ[\]^

PC437
ÇüéâäàåçêëèïîìÄÅÉæÆôöòûùÿÖÜ ¢£¥Pƒáíóúñ№ª¿⌐¬½¼¡«»
üéâäàåçêëèïîìÄÅÉæÆôöòûùÿÖÜ ¢£¥Pƒáíóúñ№ª¿⌐¬½¼¡«»
éâäàåçêëèïîìÄÅÉæÆôöòûùÿÖÜ ¢£¥Pƒáíóúñ№ª¿⌐¬½¼¡«»
âäàåçêëèïîìÄÅÉæÆôöòûùÿÖÜ ¢£¥Pƒáíóúñ№ª¿⌐¬½¼¡«»
äàåçêëèïîìÄÅÉæÆôöòûùÿÖÜ ¢£¥Pƒáíóúñ№ª¿⌐¬½¼¡«»
àåçêëèïîìÄÅÉæÆôöòûùÿÖÜ ¢£¥Pƒáíóúñ№ª¿⌐¬½¼¡«»
åçêëèïîìÄÅÉæÆôöòûùÿÖÜ ¢£¥Pƒáíóúñ№ª¿⌐¬½¼¡«»
çêëèïîìÄÅÉæÆôöòûùÿÖÜ ¢£¥Pƒáíóúñ№ª¿⌐¬½¼¡«»
êëèïîìÄÅÉæÆôöòûùÿÖÜ ¢£¥Pƒáíóúñ№ª¿⌐¬½¼¡«»
ëèïîìÄÅÉæÆôöòûùÿÖÜ ¢£¥Pƒáíóúñ№ª¿⌐¬½¼¡«»
èïîìÄÅÉæÆôöòûùÿÖÜ ¢£¥Pƒáíóúñ№ª¿⌐¬½¼¡«»
ïîìÄÅÉæÆôöòûùÿÖÜ ¢£¥Pƒáíóúñ№ª¿⌐¬½¼¡«»
îìÄÅÉæÆôöòûùÿÖÜ ¢£¥Pƒáíóúñ№ª¿⌐¬½¼¡«»
ìÄÅÉæÆôöòûùÿÖÜ ¢£¥Pƒáíóúñ№ª¿⌐¬½¼¡«»
ÄÅÉæÆôöòûùÿÖÜ ¢£¥Pƒáíóúñ№ª¿⌐¬½¼¡«»
```

4-3 Self-Test Sample (SPP-L310)

1) Bluetooth

BIXOLON SPP-L310 CONFIGURATION

FIRMWARE VERSION	: V01.00 STD 010126
LANGUAGE	: STANDARD
EMULATION	: SLCS & BPL-Z & BPL-C
PRINT DARKNESS	: 10/30
PRINT SPEED	: 5 IPS
TEAR OFF VALUE	: +000 DOT
TEAR OPTION	: TEAR-OFF
PRINT OFFSET	: +0000 DOT
POWER-UP ACTION	: NO ACTION
MEDIA TYPE	: BLACKMARK PAPER(REAR)
SENSOR TYPE	: REAR REFLECT
LABEL LENGTH	: 1200 DOT
LABEL WIDTH	: 576 DOT
BAUD RATE	: 115200
PARITY	: NONE
DATA BIT(S)	: 8
STOP BIT(S)	: 1
HAND SHAKING	: HARDWARE
SERIAL NUMBER	: STDBKWKA26010001
BPL-Z CODEPAGE	: CP-1252
SLCS CODEPAGE	: WCP1252-LATIN1
SLCS ICS	: U.S.A
POWER OFF TIME	: 15 MIN
IDLE TIME	: 30 SEC

CONFIGURATION CONTROL STATUS

PRINT SPEED	: COMMAND
PRINT DARKNESS	: COMMAND
PRINT WIDTH	: COMMAND
PRINT OFFSET	: COMMAND
TEAR OFF	: COMMAND
MEDIA TYPE	: COMMAND
LANGUAGE	: COMMAND

RF INTERFACE STATUS (BT)

BLUETOOTH F/W VER	: 4.0.0
MAC ADDRESS	:



401920000001

FRIENDLY NAME	: SPP-L310_000001
MODE	: CLASSIC (iOS Support)
AUTH & ENCRYPT	: ENABLED
CONNECTION MODE	: 2
PAIRING MODE	: PIN CODE

2) WLAN

BIXOLON SPP-L310 CONFIGURATION

FIRMWARE VERSION	: V01.00 STD 010126
LANGUAGE	: STANDARD
EMULATION	: SLCS & BPL-Z & BPL-C
PRINT DARKNESS	: 10/30
PRINT SPEED	: 5 IPS
TEAR OFF VALUE	: +000 DOT
TEAR OPTION	: TEAR-OFF
PRINT OFFSET	: +0000 DOT
POWER-UP ACTION	: NO ACTION
MEDIA TYPE	: BLACKMARK PAPER(REAR)
SENSOR TYPE	: REAR REFLECT
LABEL LENGTH	: 1200 DOT
LABEL WIDTH	: 576 DOT
BAUD RATE	: 115200
PARITY	: NONE
DATA BIT(S)	: 8
STOP BIT(S)	: 1
HAND SHAKING	: HARDWARE
SERIAL NUMBER	: STDBKXKA26010001
BPL-Z CODEPAGE	
SLCS CODEPAGE	: CP-1252
SLCS ICS	: WCP1252-LATIN1
POWER OFF TIME	: U.S.A
IDLE TIME	: 15 MIN
	: 30 SEC

CONFIGURATION CONTROL STATUS

PRINT SPEED	: COMMAND
PRINT DARKNESS	: COMMAND
PRINT WIDTH	: COMMAND
PRINT OFFSET	: COMMAND
TEAR OFF	: COMMAND
MEDIA TYPE	: COMMAND
LANGUAGE	: COMMAND

RF INTERFACE STATUS (WLAN)

WLAN F/W VER	: 02.00(1234s)
MAC ADDRESS	:



001594000001

SYSTEM NAME	: SPP-L310
NETWORK MODE	: SOFT AP
FREQUENCY	: (PRIORITY)2.4GHZ/5GHZ
AUTHENTICATION	: OPEN
ENCRYPTION	: NONE
ESSID	: PRINTER_000001
DHCP	: ENABLED
IP ADDRESS	: 192.168.1.1
NETMASK	: 255.255.255.0
GATEWAY	: 192.168.1.2
PORT	: 9100
INACTIVITY TIME	: 10 SEC

5. Label Printing Function

5-1 Label Function Setting

Label media and black mark media available at the label mode.
The SPP-R310 is set to receipt mode and the SPP-L310 is set to label mode by default.

5-1-1 How to set label mode and receipt mode

5-1-1-1 Setting Via Printer

1) Turn on the printer power.
2) Open the media cover and press and hold down the media feed button for longer than two seconds.
3) After the buzzer tone is emitted, insert media and close the cover.
4) Repeat the steps above to return to receipt mode.

- The SPP-R310/R310U automatically sets itself according to the position of the sensor built into the printer.
- SPP-L310 prints out the following message when switching to Label Mode.

Gap mode : FEED button BlackMark mode : POWER button

Press the FEED button to switch to gap mode, and press the Power button to switch to black mark mode.

5-1-1-2 Setting Via Bixolon Utility

1) Mode settings are available in the Bixolon Utility.

5-2 Auto Calibration Function

The label printing function requires the recognition of label media gaps and black mark media black bar in order to print. If label media is not properly recognized, use the auto calibration function below.

5-2-1 SPP-R310/R310U Auto Calibration

1) Turn the printer power off while in label mode.
2) Press and hold down the media feed button and then press the power button.
3) After the following printout is outputted, press the power button to perform auto calibration.

   Select the mode
   Auto Calibration: Power Button
   Self Test: Feed Button

- Starting with firmware version V01.26 (070921), the real-time Auto Calibration feature is supported. Calibration proceeds automatically during label media feeding without requiring manual execution by the user.

5-2-2 SPP-L310 Auto Calibration

1) Load media and press the FEED button to automatically detect the media.
2) In continuous mode, the media feed operation is not performed to recognize label media. Please refer to 5-1 for switching to label mode.
3) If the printer setting is set to Black Mark, Gap media recognition is not possible. Refer to 5-1 or change the sensor type using Bixolon Utility.

6. Maintenance

6-1 Printer Cleaning

Accumulated dust or debris inside the printer may degrade print quality.

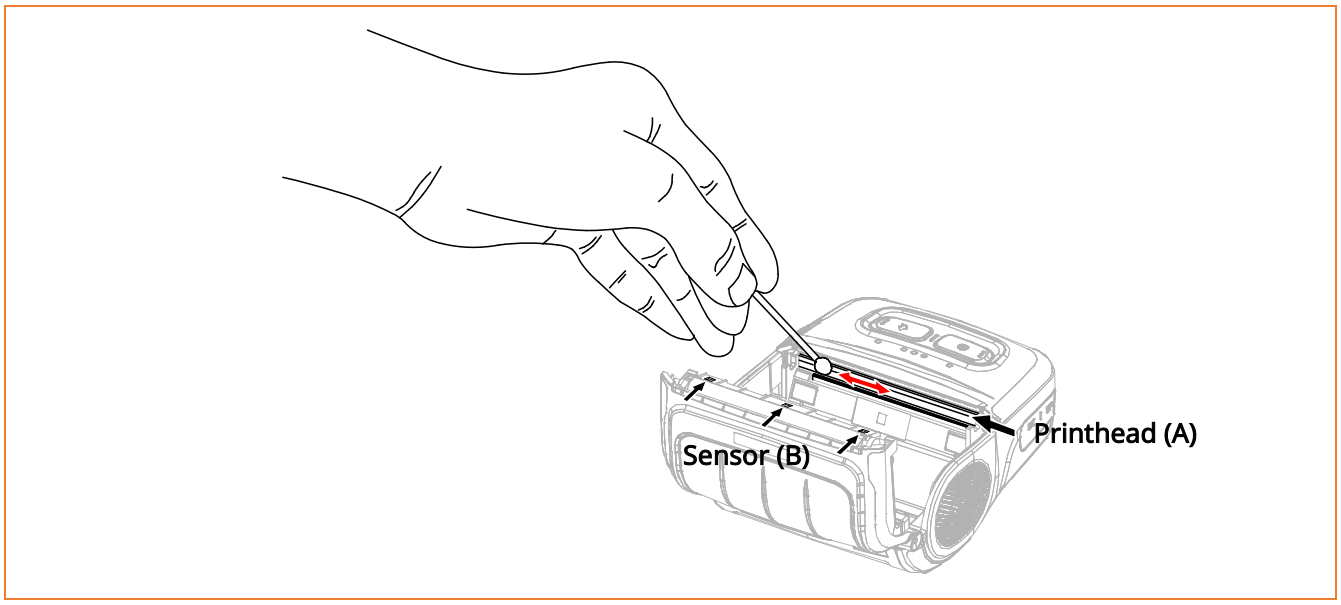

1) Turn off the printer and disconnect all cables from the product.
2) Open the media cover and remove any media inside.
3) Clean the printhead (A) using the cloth or cotton swab soaked in alcohol for medical.
4) Using the cloth or cotton swab soaked in alcohol for medical, remove the media dust from the black mark sensor (B).
   (Sensor could be located in the middle or on left or on right)
5) Do not use the printer for one to two minutes after cleaning until the alcohol for medical has completely evaporated and dried.
6) Insert the media and close the media cover.

- **The head is very hot while the printer is running. When cleaning the head, be careful not to touch the heating part of the head with your hands.**
- **The head may be damaged by static electricity, etc.**
- **Be careful not to scratch the head.**
- **Be sure to use only genuine linerless media supplied by Bixolon. Otherwise, post-sale support may not be available.**
- **Be sure to turn off the power before you proceed with cleaning.**
- **When using linerless media, clean the head periodically after using 4 rolls of media (100 m) or at least once a week. Otherwise, the product may fail and print quality may be compromised.**

7. Specifications

7-1 Printer Specifications

• For detailed information on Printer Specifications, refer to the **Product Spec Sheet** available on the Bixolon website (http://www.bixolon.com).

7-2 Recommended Media

• For detailed information on Recommended Media, refer to the **Mobile Media Specification** available on the Bixolon website (http://www.bixolon.com).

Revision History

Ver.	Date	Description
2.00	09-28-2026	New