BIXOLON®

# User's Manual

# Label Printer

**Ver. 1.13**

**SLP-T400 / T400E**
**SLP-T403 / T403E**

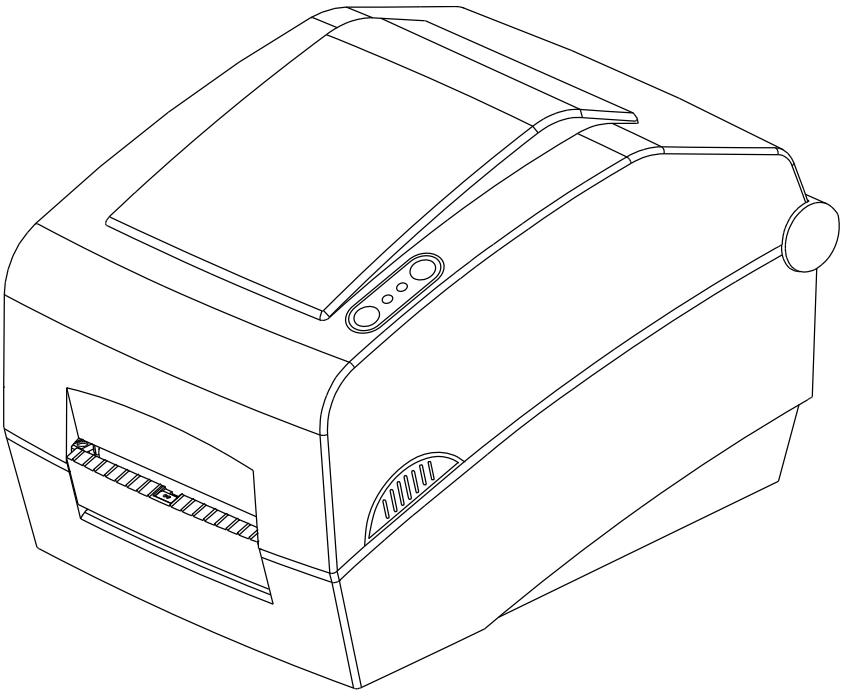

http://www.bixolon.com

# ■ Table of Contents

**※ Manual Information & Usage Precautions....3**

**1. Content Confirmation....7**

**2. Product Part Names....8**

**3. Installation & Usage....10**
3-1 Power Connection....10
3-2 Interface Cable Connection....11
3-3 Paper Installation....12
3-4 Ribbon Installation....13
3-5 LED Display....17
3-6 Test printing....18

**4. Self-Test....19**

**5. Detailed features....20**
5-1 Printer Settings with Dip switches....20
5-2 Printer Settings with Utility Program....22
5-3 Pause/Cancel....23
5-4 Gap Sensor Auto-Calibration....24
5-5 Gap Sensor Manual-Calibration....25
5-6 The Peel-Off....26
5-7 Using Fan-Fold Paper....28
5-8 Auto Cutter (Option)....29

**6. Cleaning Head....30**
6-1 Cleaning Head....30
6-2 Cleaning Sensors, Roller or/and Paper Path....31

**7. Appendix....32**
7-1 Specifications....32
7-2 Certification....33
7-3 Label Types....33

# ■ Manual Information

This user manual contains basic information for product usage as well as for emergency measures that may be required.

※ The following separate manuals provide more detailed content on various technological issues and areas.

**1. Windows Driver Manual**

This manual provides information on the installation instructions and main functions of the Windows Driver.

**2. Unified Label Printer Utility Manual**

This manual provides information on the usage of software for function selection of this product, operating condition modification, etc.

The following functions are available.

1) Firmware Downloader
2) Factory Font Downloader
3) Soft-Font (or Downloadable-font) Downloader
4) PCX File Downloader
5) User Setting Manager
6) File Transfer Manager
7) SLCS Tester

**3. Programming (SLCS) Manual**

This manual provides information on label printer commands.

**4. True Font Downloader Manual**

This manual provides information on the usage of the font downloader that can download True Fonts and facilitate their usage as Device Fonts.

**5. Ethernet interface Manual**

This manual provides information on the configuration and usage of Ethernet interface.

**6. Label design program Manual**

This manual provides information on the usage of the Windows PC program that can make labels by adding text, graphics, or barcodes at desired positions.

We at BIXOLON maintain ongoing efforts to enhance and upgrade the functions and quality of all our products. In following, product specifications and/or user manual content may be changed without prior notice.

## ■ Safety Precautions

In using the present appliance, please keep the following safety regulations in order to prevent any hazard or material damage.

### WARNING

Violating following instructions can cause serious injury or death.

**Do not plug several products in one multi-outlet.**

- This can provoke over-heating and a fire.
- If the plug is wet or dirty, dry or wipe it before usage.
- If the plug does not fit perfectly with the outlet, do not plug in.
- Be sure to use only standardized multi-outlets.

PROHIBIT

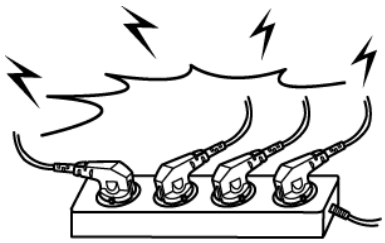

**You must use only the supplied adapter.**

- It is dangerous to use other adapters.

PROHIBIT




**Do not pull the cable to unplug.**

- This can damage the cable, which is the origin of a fire or a breakdown of the printer.

PROHIBIT

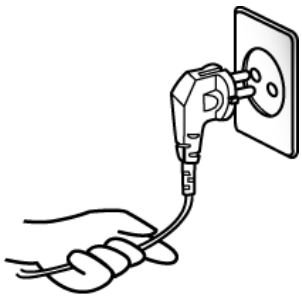

**Keep the plastic bag out of children's reach.**

- If not, a child may put the bag on his head.

PROHIBIT



**Do not plug in or unplug with your hands wet.**

- You can be electrocuted.

PROHIBIT



**Do not bend the cable by force or leave it under any heavy object.**

- A damaged cable can cause a fire.

PROHIBIT

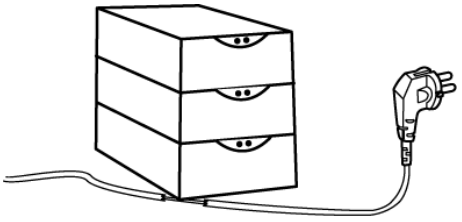

# CAUTION

Violating following instructions can cause slight wound or damage the appliance.

**If you observe a strange smoke, odor or noise from the printer, unplug it before taking following meas ures.**

- Switch off the printer and unplug the set from the mains.
- After the disappearance of the smoke, call your dealer to repair it.




**Keep the desiccant out of children's reach.**

- If not, they may eat it.




**Install the printer on the stable surface.**

- If the printer falls down, it can be broken and you can hurt yourself.

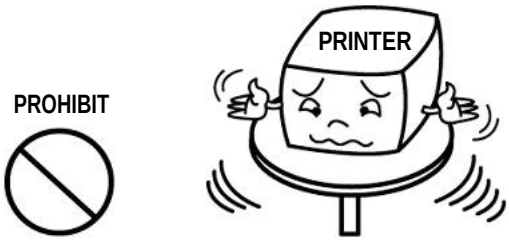


**Use only approved accessories and do not try to disassemble, repair or remodel it for yourself.**

- Call your dealer when you need these services.
- Do not touch the blade of auto cutter.

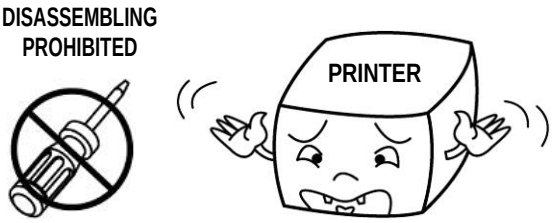


**Do not let water or other foreign objects in the printer.**

- If this happened, switch off and unplug the printer before calling your dealer.




**Do not use the printer when it is out of order. This can cause a fire or an electrocution.**

- Switch off and unplug the printer before calling your dealer.

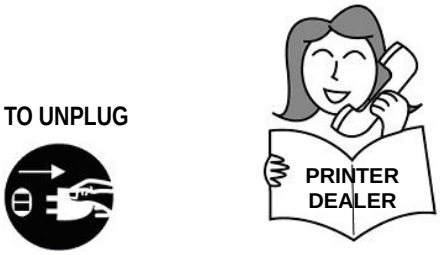

## ■ Other Precautions

The copyright for this user manual and various other manuals is property of the BIXOLON Co., Ltd. Any copying or conversion into electronic firm and saving of this material without the express written permission of BIXOLON Co., Ltd. is strictly prohibited.

Use of the information contained in this manual is not subject to any patent liability. This manual has been prepared with utmost care and attention to detail but may contain certain errors and/or omissions.

BIXOLON Co., Ltd. is not legally liable for any damages resulting from the use of the information in this manual.

BIXOLON Co., Ltd. and its affiliates are not legally liable for any damages, loss, costs, and/or expenses that result from the breakdown, malfunction, and/or misuse of the product due to violation or neglect of the operation and maintenance information and instructions provided by the BIXOLON Co., Ltd., as well as from the unauthorized alteration, repair, and/or modification of the product by the user and/or third party.

BIXOLON Co., Ltd. is not legally liable for any damages and/or issues resulting from the use of options and/or parts that are not authentic BIXOLON products or authorized products.

# 1. Content Confirmation

The following items should all be contained in the printer package.
Contact the dealer from which the purchase was made if any item is damaged and/or missing.

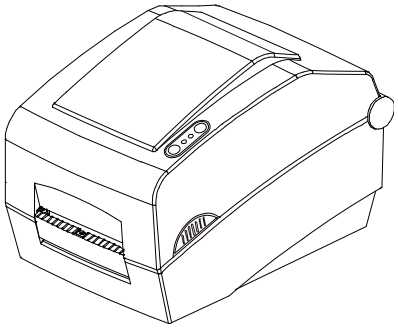

**SLP-T40xx**

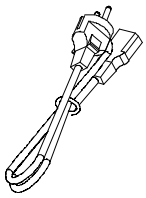

**Power Cord**

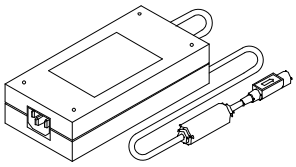

**AC Adapter**

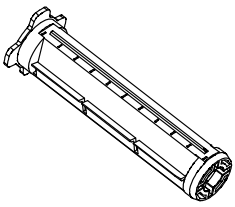

**Holder Ribbon (2ea)**



**Quick Manual**

**※ Optional items**



**USB Cable**



**RS-232C(Serial) Cable**



**IEEE1284 (Parallel) Cable**

## 2. Product Part Names

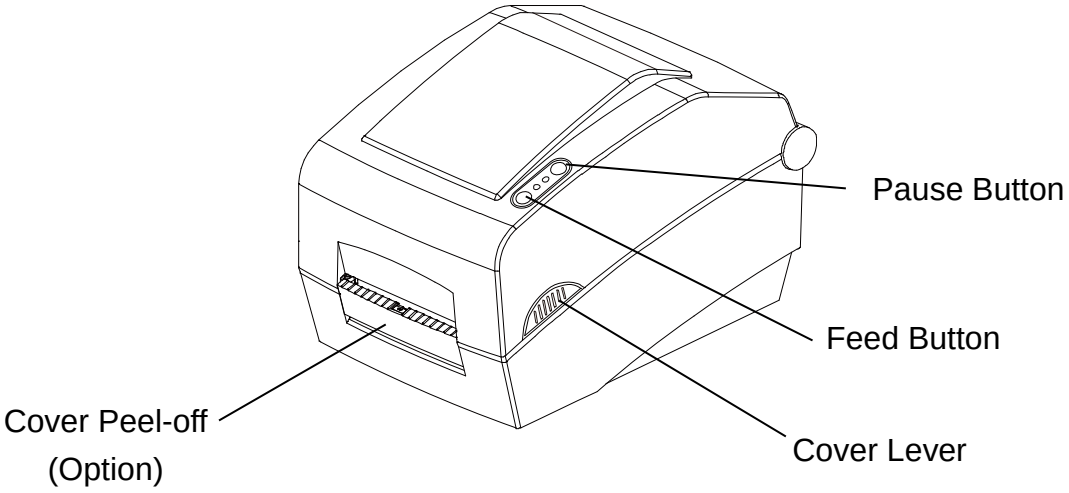


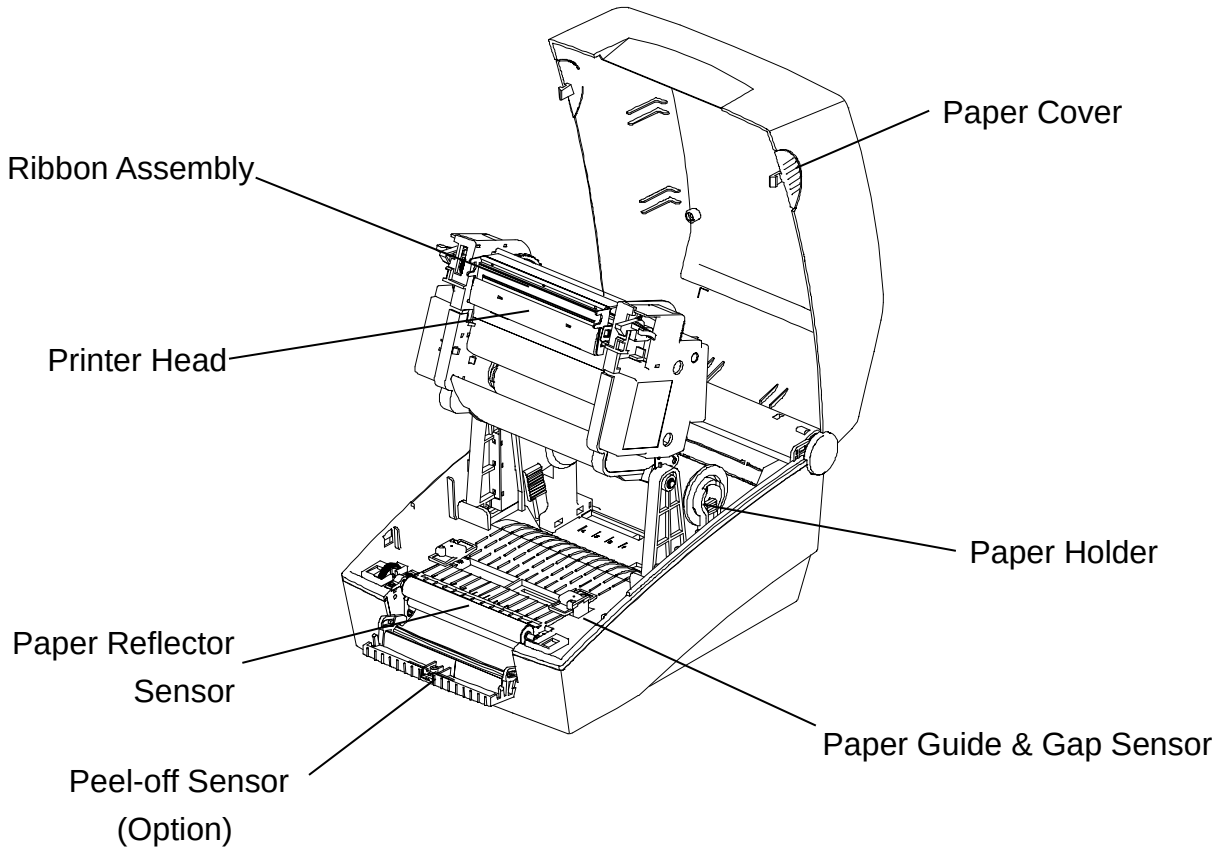

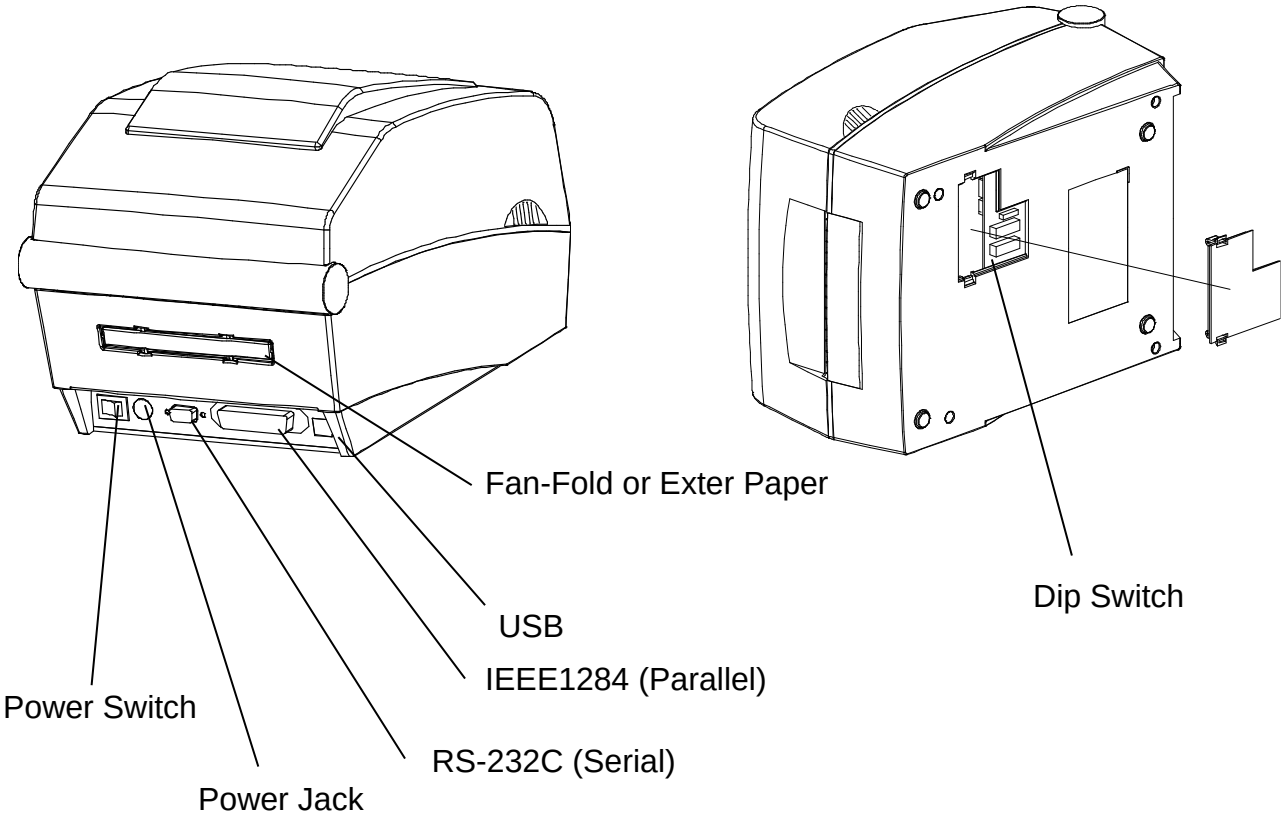
Fan-Fold or Exter Paper
Dip Switch
USB
IEEE1284 (Parallel)
Power Switch
RS-232C (Serial)
Power Jack

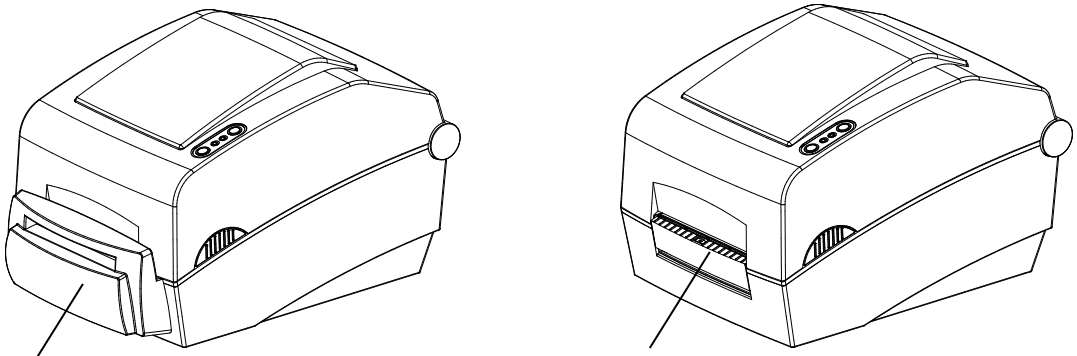
Auto Cutter
(Option)
Cover Peel-off
(Option)

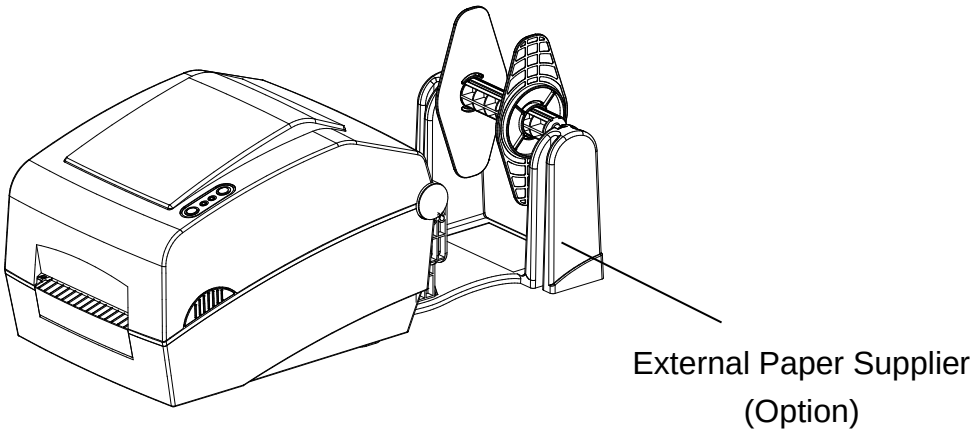
External Paper Supplier
(Option)

# 3. Installation & Usage

### 3-1 Power Connection

Connect power to the printer as shown below.

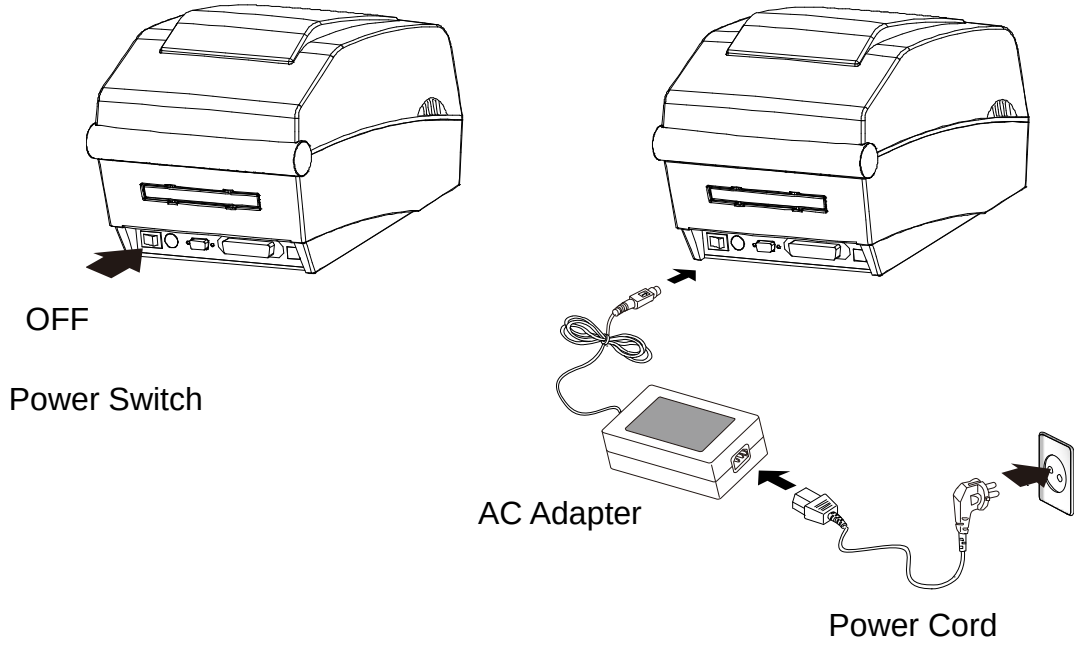


1) Turn off the printer power switch.

2) Check to see that the AC adapter voltage matches that of the power source.

3) Connect the AC adapter jack to the printer power connector.

4) Connect the power cord to the AC adapter.

5) Connect the power cord to a power source/outlet.

### 3-2 Interface Cable Connection

Connect the interface cable as shown below.

This printer supports the following communications interface standards.

- RS-232C (Serial)
- IEEE1284 (Parallel) (exclusively for SLP-T400D,T403D)
- USB
- Ethernet (exclusively for SLP-T400E,T403E)

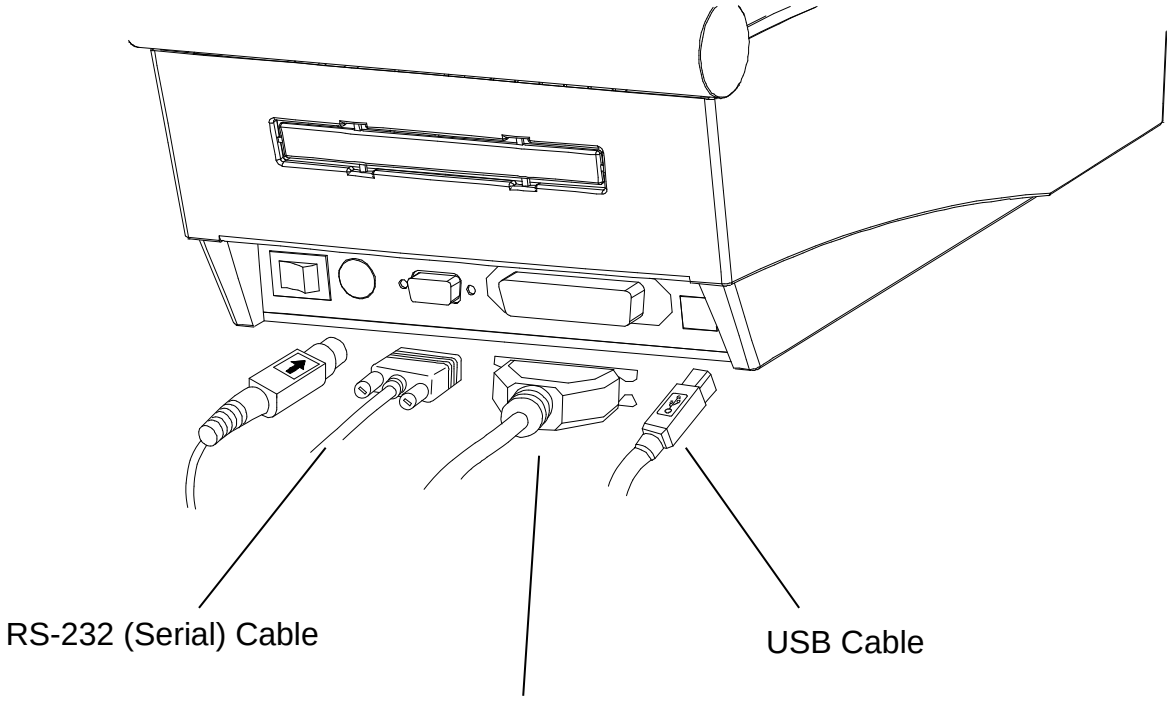


1) Turn off the power switch.

2) Connect the communication cable to the printer communication port to be used.
- For a Serial cable, secure by tightening the screws on both sides.
- For a Parallel cable, secure by fastening the clips on both sides.
- Connect USB cable when using USB interface.
- Connect LAN cable when using Ethernet interface.

### 3-3 Paper Installation

1) Open the Paper Cover.

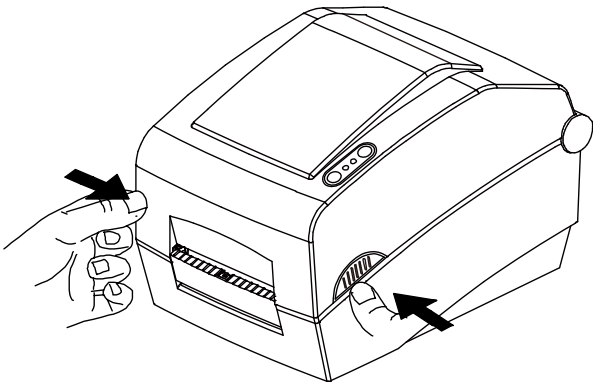

2) Spread the paper holder and insert paper as shown.

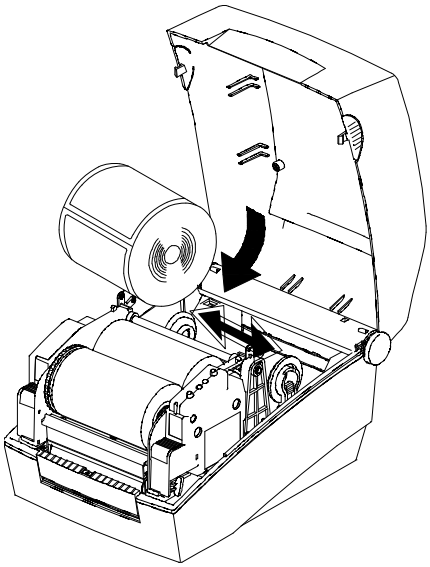

3) Open the Ribbon Assembly and spread the paper guide.

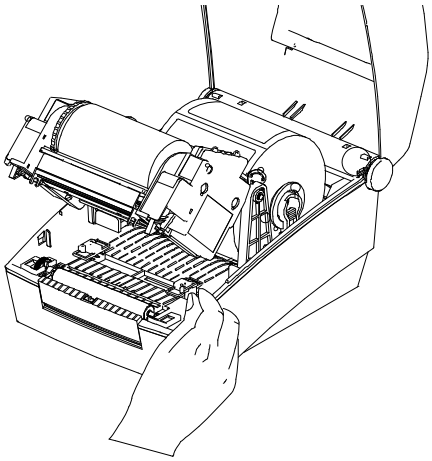

4) Adjust the paper guide to the width of the paper and close the Ribbon Assembly. (keep note of paper printing direction)

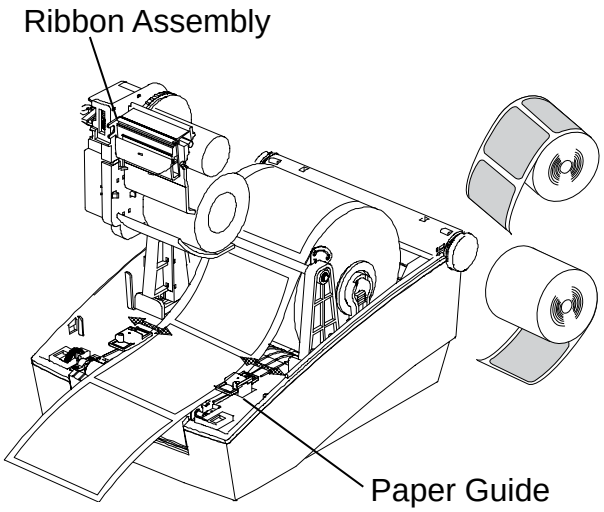


5) Close the Paper Cover.

### 3-4 Ribbon Installation

3-4-1 Type of Ribbon

1) Type by Film Coating Location
- Take note before ribbon purchase that only ribbons facing outward can be used.

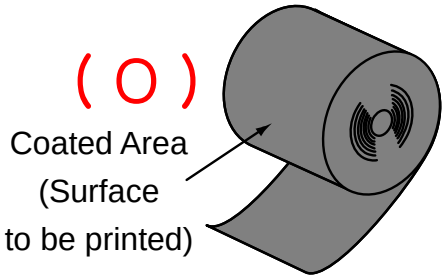


Outside Ribbon

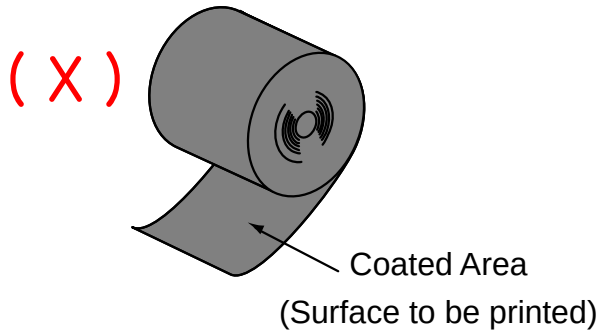


Inside Ribbon

**※ Note**
- Follow the procedure described below to determine the coating surface of the ribbon.

• Ribbon test using adhesive material
- Perform contact test in order to determine which side is coated if there are useable labels.

• Complete the following steps to carry out the contact test
- Remove the liner from the label
- Put a piece of adhesive surface of the label on the outer/inner surface of the ribbon, and apply pressure.
- Remove the label from the ribbon
- Check whether adhesive surface of the label is stained by black ink ribbon.

2) Type by Roll Core
- This printer can be used to one-inch or half-inch core ribbon.
- For a 1-inch core, a roll core must be used.
- The holder ribbon and roll core of the fully used ribbon must be reused. Do not discard.

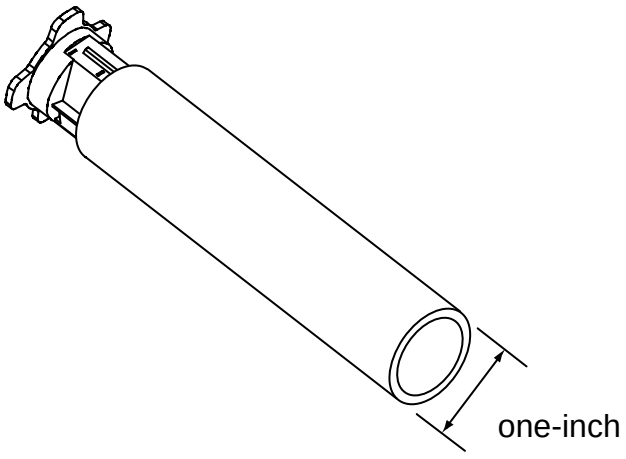


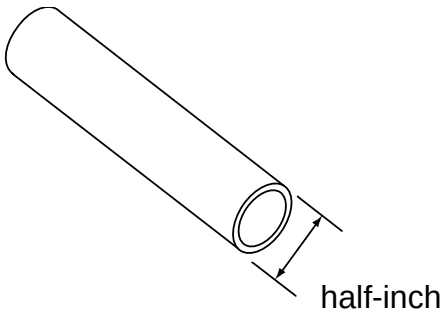

3-4-2 Inserting a One-Inch Core Ribbon

1) Insert the Holder ribbon into the core and ribbon. (keep note of ribbon printing direction)

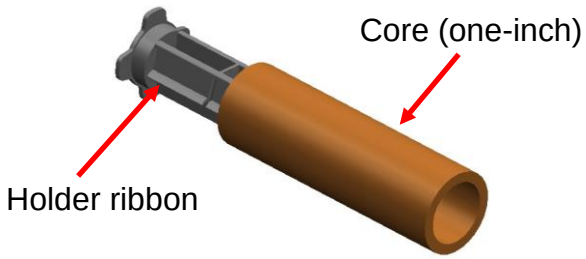




2) Open the ribbon assembly and insert the ribbon and core by pushing from left to right.

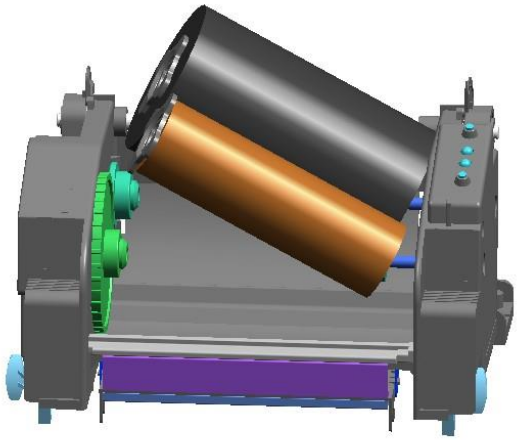

3) Apply tape to the coiling portion of the ribbon.

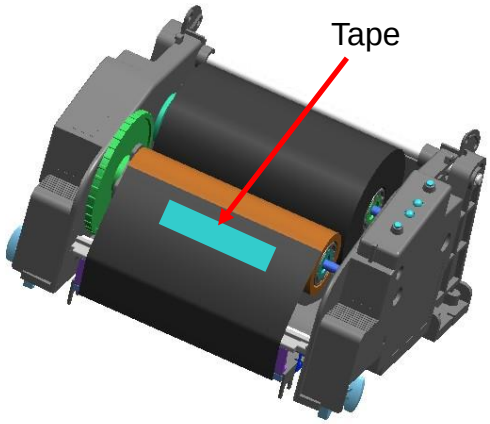


4) Press the Close area to shut the ribbon assembly.

3-4-3 Inserting a Half-Inch Core Ribbon

1) Open the ribbon assembly and insert the ribbon and core by pushing from left to right. (keep note of ribbon printing direction)

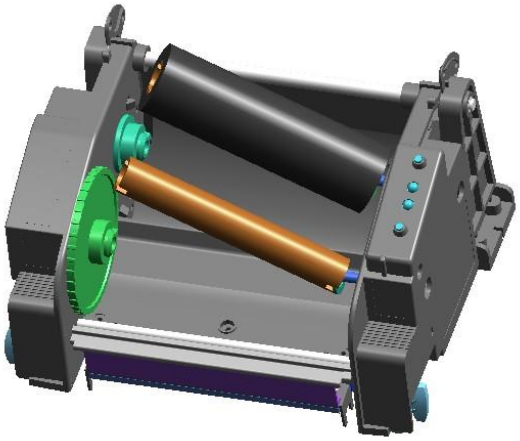

2) Apply tape to the coiling portion of the ribbon.

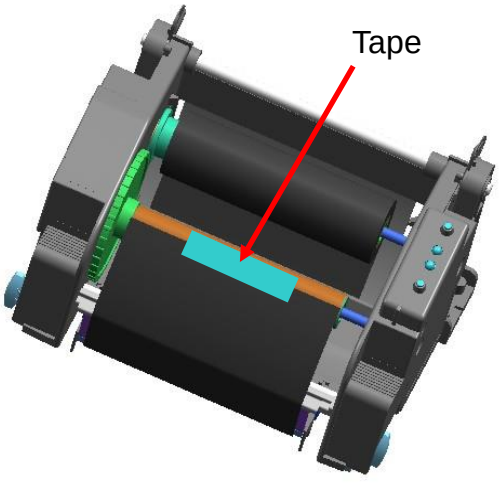

3-4-4 Knob Adjustment by Ribbon Length

Ribbon lengths of 74m, 100m (0.5” core), and 300m (1” core) can all be used with this product. Adjust the knob accurately according to the ribbon length (74 ~ 300 m). Exercise care as print quality and operation can be affected.

- The product is shipped with a default setting for a ribbon length of 300m (1” core). To use a 74m (0.5” core) ribbon, adjust (rotate) the knob in the direction of 74m prior to use.

- When the cover is outside the knob as shown in the image, the ribbon length is set to 74m. If the cover is inside the knob as shown in Image B, the ribbon length is set to 300m.

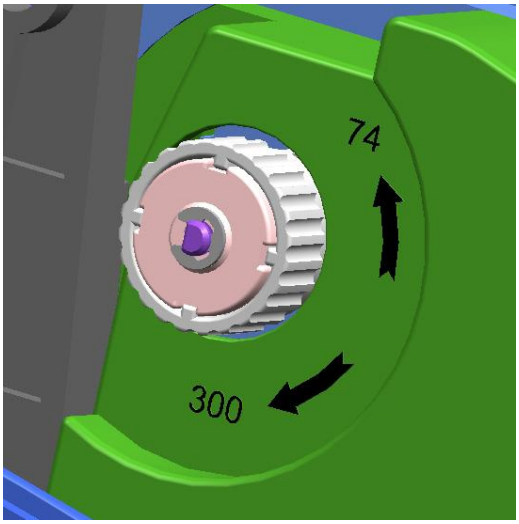


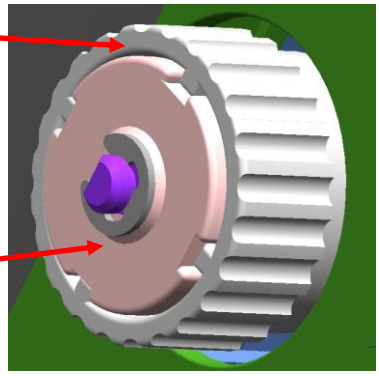


Image-A (74m)

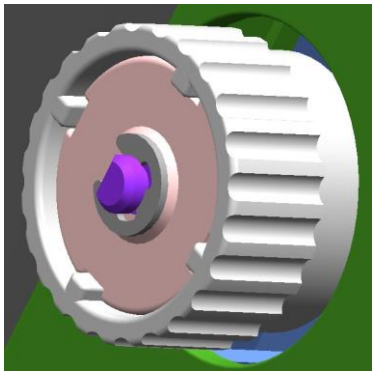

Image -B (300m)

■ Knob Adjustment

- Grasp the ribbon while it is fitted and rotate the knob as shown in the image.

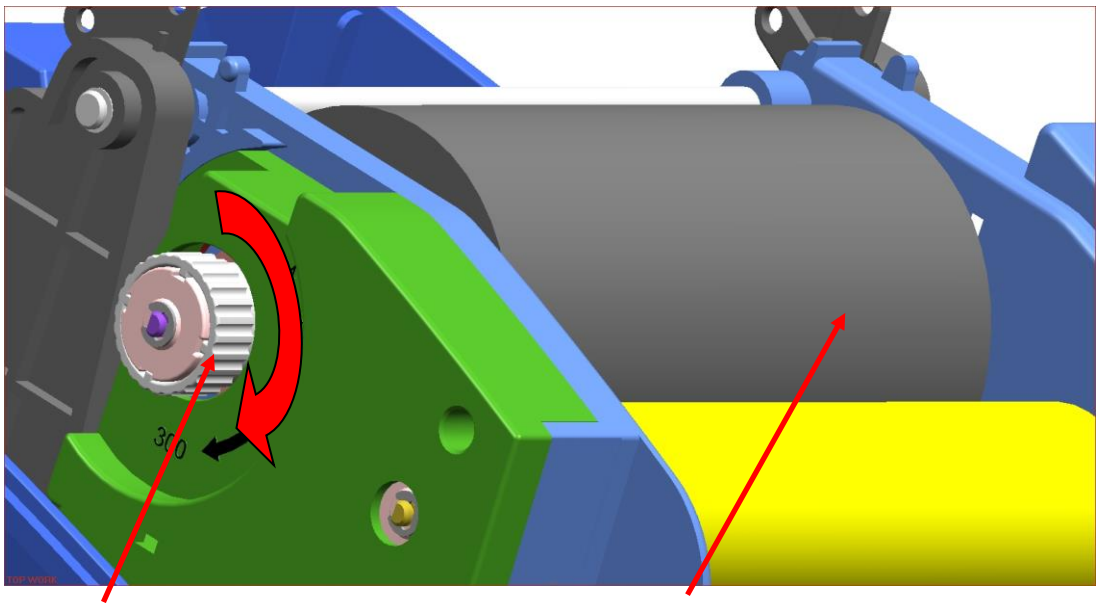

3-4-5 Narrow Ribbon Installation

When using ribbons of widths of 110mm or lower, install in a centered position on the holder ribbon.

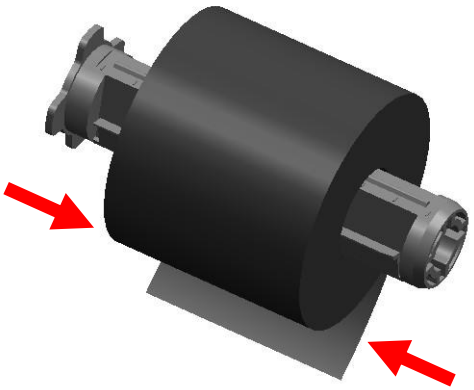

3-4-6 Ribbon Removal

1) Use a knife or other sharp-edged object to cut the ribbon.
(Take care not to injure hands)

2) Open the ribbon assembly and remove the ribbon and core by pushing from left to right.

3) Detach the ribbon holder from the ribbon and core.

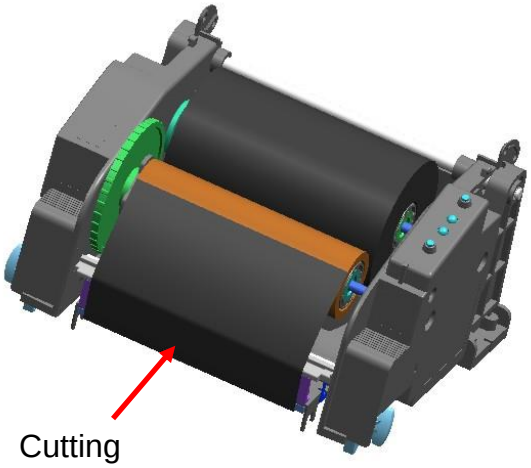


3-4-7 Ribbon Sensor Activation

To activate the ribbon sensor, check to see if the dip switch is properly set. (Refer to dip switch table) If the ribbon sensor is inactive, detection of low ribbon levels and/or disconnected ribbon is not possible.

**※ CAUTION**

1. When replacing a ribbon, keep affixed the core of the fully used ribbon to the ribbon coiling portion on the other side and do not discard as its use is required.
2. As the ribbon holder is required for continuous use, make sure not to misplace it.

### 3-5 LED Display

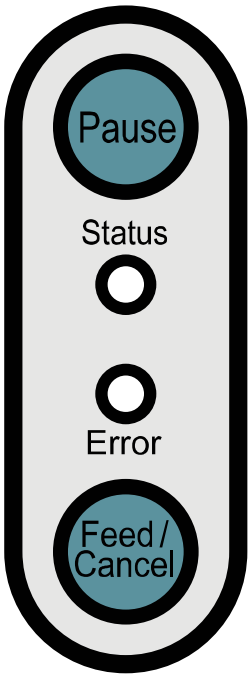


Pause : During print jobs, this button can be used to temporarily cease printing and/or again to resume printing.

Status : The current printer status can be viewed. (Refer to table)

Error : The current printer status can be viewed. (Refer to table)

Feed/Cancel : Paper feed or cancel the print job.

The current printer status can be viewed via the printer's LED display.

| LED Type | | Printer Status |
|---|---|---|
| Error | Status | |
| Green On | Green On | Normal status, on standby to receive date from the host (e.g. PC) |
| Red Blinking | Red On | Ribbon cover opened |
| Orange Blinking | Red On | No paper |
| Green Blinking | Red On | Print stoppage due to TPH (print head) overheating (Printing resumes automatically after a certain period of time if the temperature of TPH drops) |
| Red On | Red On | No ribbon |
| Red On | Off | On standby for user button input for automatic sensor level correction |
| Red On | Green Blinking | Print stoppage after input of Pause button, Press Pause button again to resume printing |
| Red Blinking | Green On | Print cancellation after input of Cancel button, Press Cancel button to return to standby mode, all data received deleted in Cancel mode |

## 3-6 Test printing

### 3-6-1 Printing using Windows driver

Windows Driver installation files and manuals are provided on the BIXOLON official website. (http://www.bixolon.com)
Please refer to the manual to install the Windows Driver and print a test page.

### 3-6-2 Printing using label design program

Label Design Program installation files and manuals are provided on the BIXOLON official website. (http://www.bixolon.com)
Please refer to the manual to install the Label Design Program and print a test page.

# 4. Self-Test

The self-test checks whether the printer has any problems.
(Users cannot perform this procedure if using the printer's label peel-off option.)
If the printer does not function properly, contact an authorized dealer.

The self-test checks the following;

1) Make sure that the paper roll has been installed properly.

2) Turn on the power while holding down the FEED button. The self-test begins.

3) The self-test prints the current printer status, which provides the control ROM version and the DIP switch settings.

4) After the self-test results are printed out:

- No button input within 2 seconds: Normal Print Mode
- Button pressed once within 2 seconds: Hex Dump Mode
- Button pressed twice within 2 seconds: Line Print Mode

* The BXL-POS command set is used in Line Print Mode.
Received data is printed in sequence similar to a receipt printer.

# 5. Detailed features

### 5-1 Printer Settings with Dip switches

The following functions can be selected using the dip switches.

- Print Speed, Print Density, Paper Select
- Auto Cutter, Back Feed, Ribbon Sensor Operation, Paper Sensor Operation
- Serial Communication Speed and Busy Status

The dip switches are located on the bottom of the printer.

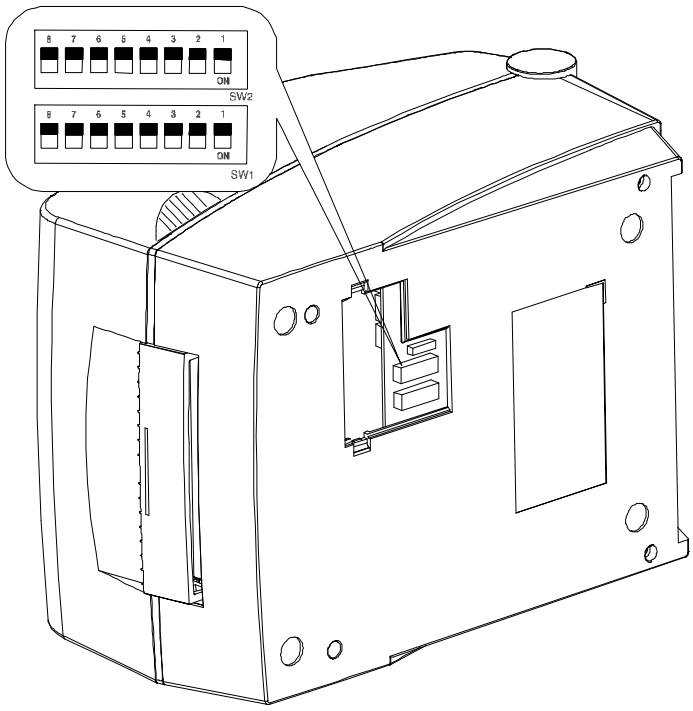


Follow these steps when changing dip switch settings:

1) Turn the printer power switch off.

2) Turn the printer upside down and remove the dip switch cover on the bottom.

3) Flip the dip switches using tweezers or another narrow-ended tool. Switches are off when up and on when down following the figure.

4) New settings take effect when the printer is turned back on.

**※ CAUTION**

- Make sure if the dip switch cover is closed prior to operating

[Table 1] Dip Switch 1

| No | Functions | Details | | | |
|---|---|---|---|---|---|
| 1-1 | Speed Selection | Off | 5.0 ips | | |
| | | On | 6.0 ips | | |
| 1-2<br>1-3<br>1-4 | Density Selection | 4 | 3 | 2 | Density |
| | | Off | Off | Off | 6 |
| | | Off | Off | On | 8 |
| | | Off | On | Off | 10 |
| | | Off | On | On | 12 |
| | | On | Off | Off | 14 |
| | | On | Off | On | 16 |
| | | On | On | Off | 18 |
| | | On | On | On | 20 |
| 1-5 | Exhibition Selection | Off | Normal Mode | | |
| | | On | Demo Mode | | |
| 1-6 | Media Selection | Off | Label Paper | | |
| | | On | Thermal Continuous Paper | | |
| 1-7 | Auto Cutter | Off | Without Auto Cuter | | |
| | | On | With Auto Cuter | | |
| 1-8 | Back Feed Option | Off | Back Feeding Enable | | |
| | | On | Back Feeding Disable | | |

[Table 2] Dip Switch 2

| No | Functions | Details | | |
|---|---|---|---|---|
| 2-1<br>2-2 | Baud Rate Selection | 2 | 1 | Baud Rate |
| | | Off | Off | 9,600 bps |
| | | Off | On | 19,200 bps |
| | | On | Off | 57,600 bps |
| | | On | On | 115,200 bps |
| 2-3 | Media Detection | Off | Detect Gap | |
| | | On | Detect Black Mark<br>1)Dip S/W 1-6 OFF: Reverse Side Black Mark<br>2)Dip S/W 1-6 On: Printed Side Black Mark (Option) | |
| 2-4 | Ribbon Sensor | off | Enable | |
| | | On | Disable | |
| 2-5 | Reserved | Default --- off | | |
| 2-6 | Busy Condition | Off | Receive Buffer Full | |
| | | On | *Offline<br>*Receive Buffer Full | |
| 2-7 | Paper End Sensor Status | Off | Enable | |
| | | On | Disable | |
| 2-8 | Long Label Split Printing | Off | Disable | |
| | | On | Enable | |

## 5-2 Printer Settings with Utility Program

The printer settings utility program offered by the manufacturer can be used to change a variety of basic printer settings. The basic settings set via the utility override printer command settings. Thus, users wishing to use command settings to control the printer should not change the basic settings via the utility.

Unified Label Utility installation files and manuals are provided on the BIXOLON official website. (http://www.bixolon.com)
Please refer to the manual to install the Unified Label Utility and print a test page.

1) Serial Communications Settings
Handshake, Stop Bit, Data Bit, Parity, Baud Rate, etc. can be set.

2) Language Selection
Code Page and International Character Set can be set.

3) Basic Ribbon Size & Print Density Settings
Paper Width and Length, Left/Right Margins, Print Density, etc. can be set.

4) Hardware Information Storage
For user management of equipment, the hardware version, serial number, ID, etc. can be saved and/or confirmed via command.

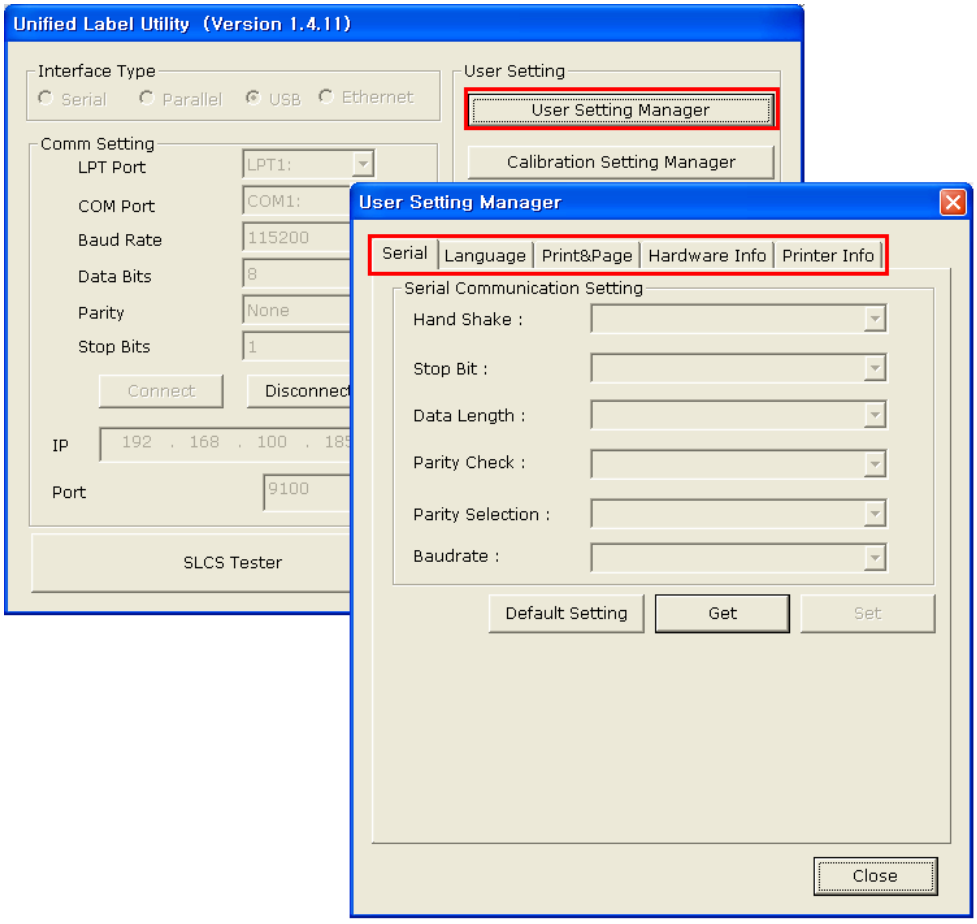

### 5-3 Pause/Cancel

During multiple-page print jobs, the Pause and Cancel button can be used to temporarily cease printing and cancel the print job altogether, respectively.

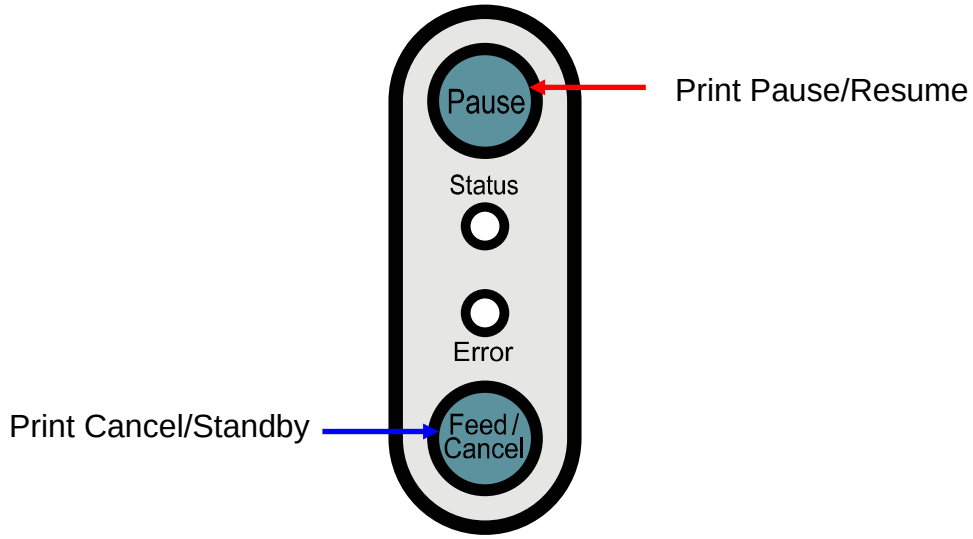


5-3-1 Pause/Resume Function

1) When printing labels, pressing the Pause button will result in the temporary stoppage of printing after the currently printed label is completed, and a change in the LED status.
   - Status LED: Green Blinking
   - Error LED: Red On

2) While the print job is paused, press the Pause button again to resume printing.

5-3-2 Print Cancellation

1) During label printing and/or pause mode, pressing the Cancel button enters the print cancellation mode.

2) The following processes occur in the print cancellation mode.
   - All label printing cancelled
   - All data received in the printer communications buffer deleted.
   - All received data deleted.

3) The LED status in the print cancellation mode can be as follows.
   - Status LED: Green On
   - Error LED: Red Blinking

4) While in the print cancellation mode, press the Cancel button again to return to print standby mode.

### 5-4 Gap Sensor Auto-Calibration

Gap sensor auto-calibration is used when the printer does not detect a gap on the label paper correctly. Generally a printer is set to detect most gap types, but sometimes detection fails and paper continues to be fed without stopping when special paper is used. In such cases, use the gap sensor auto-calibration function to facilitate proper detection.

1) Check to see that the paper is aligned correctly.

2) Open the paper cover and Ribbon Assembly, and turn on the printer while holding down the paper feed button located near the Ribbon Assembly.
   - The green LED blinks.

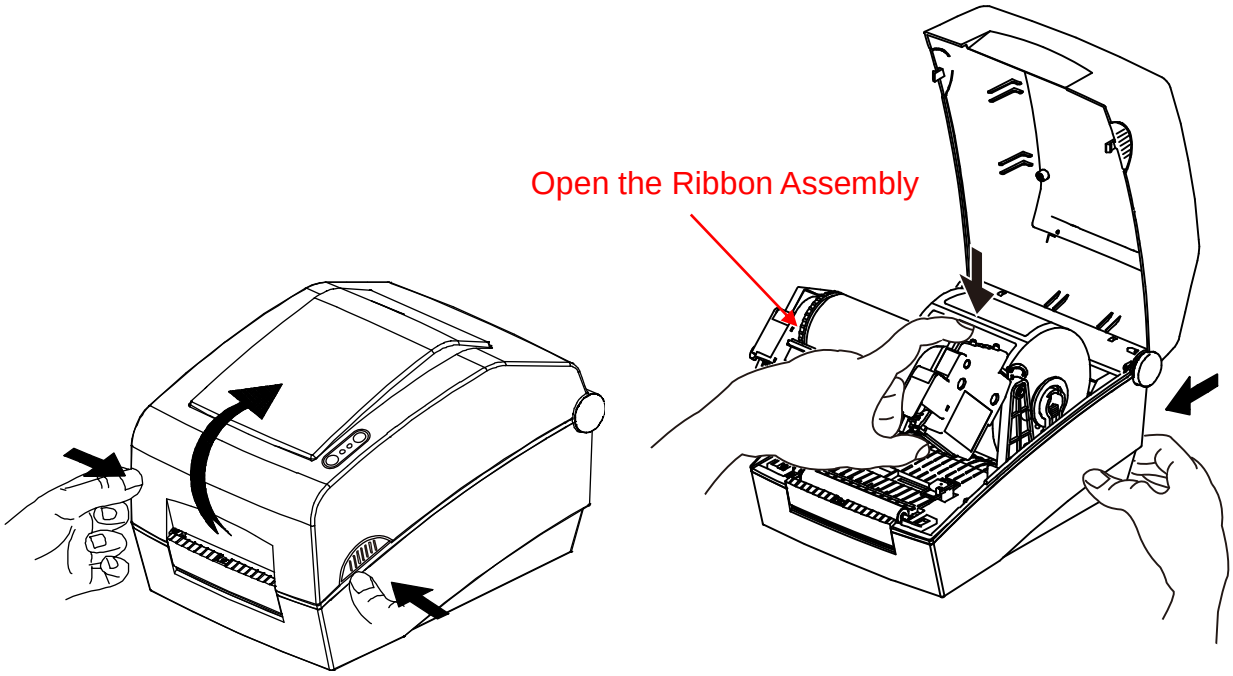


3) Close the Ribbon Assembly and paper cover.
   - An information message is printed and the red LED turns on.

4) Press the paper feed button.
   ① Once
   - The LED color changes to orange.
   - The previous gap sensor correction value is erased and reset to its default value.
   ② Twice (for automatic sensor calibration)
   - The LED color changes to green.
   - The gap sensor auto-calibration is performed as 2~3 pages of paper are fed continuously.
   ③ Three times (for automatic sensor calibration and the label length setting)
   - The LED color changes to green.
   - The gap sensor auto-calibration and label length measurement are performed while slowly feeding 4~5 pages of paper.

5) Gap sensor auto-calibration is complete.

## 5-5 Gap Sensor Manual-Calibration

Manual-calibration of media detection can be used when the printer cannot detect a media gap (or black mark) even after auto-calibration has been executed.

Users can calibrate sensor parameters in detail by using the utility program provided by the manufacturer.

The installation files and manuals are provided on the BIXOLON official website. (http://www.bixolon.com)

Please make sure the printer is connected and execute the utility program.
Please the Calibration Setting Manager Button after setting the interface type.

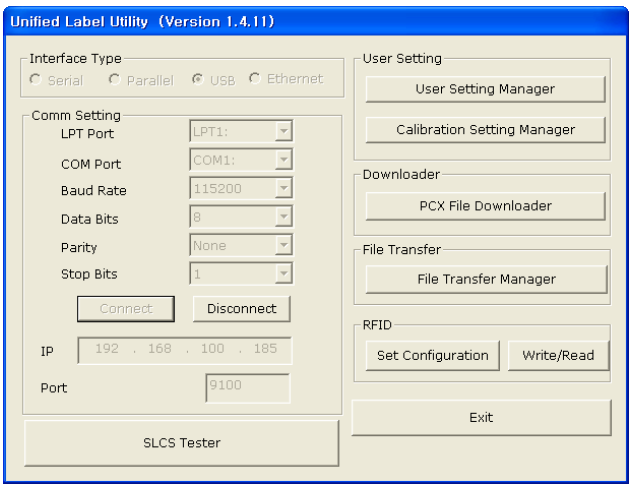


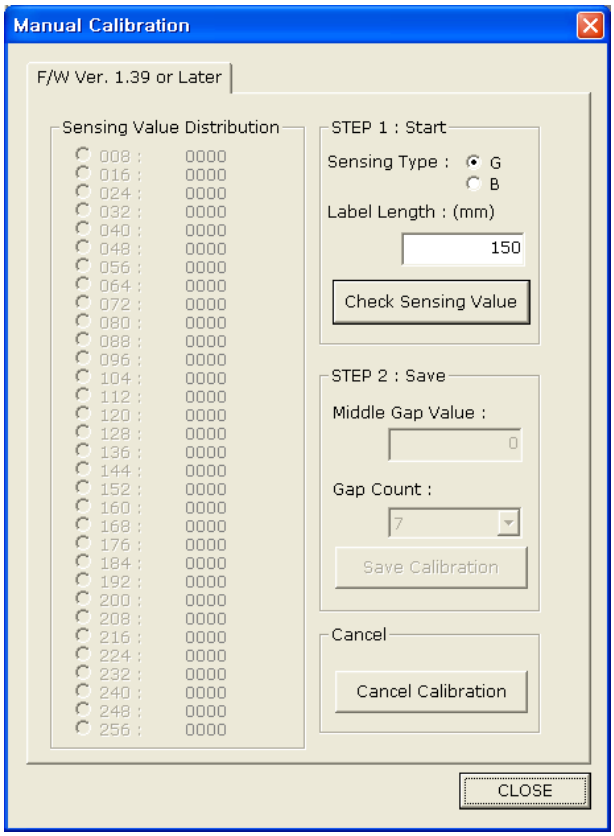


1) Select the sensing type and input the label length by millimeter and click on “Check Sensing Value” tap. Then printer starts to calibrate.
2) Printer will print the scanned values after calibration and the values will appear on the Screen.
3) Optimal sensing values will appear in black bold letters on the left of the utility screen and select one of the values and click on “Save Calibration”
4) If chosen value does not work properly, please try the other values among the black bold letters.
5) To go back to the initial value, please click on “Cancel Calibration”

### 5-6 The Peel-Off

As a function that is used to peel-off labels, it is used only with label paper.
(After adjusting the peeler switch, power must be turned off and on in order for the operation to be acknowledged.)

1) Open the paper cover.

2) Open the Ribbon Assembly.

3) Open the label peel-off cover and set the peeler switch to the ON position.
   - Check to see that the LED has turned on.

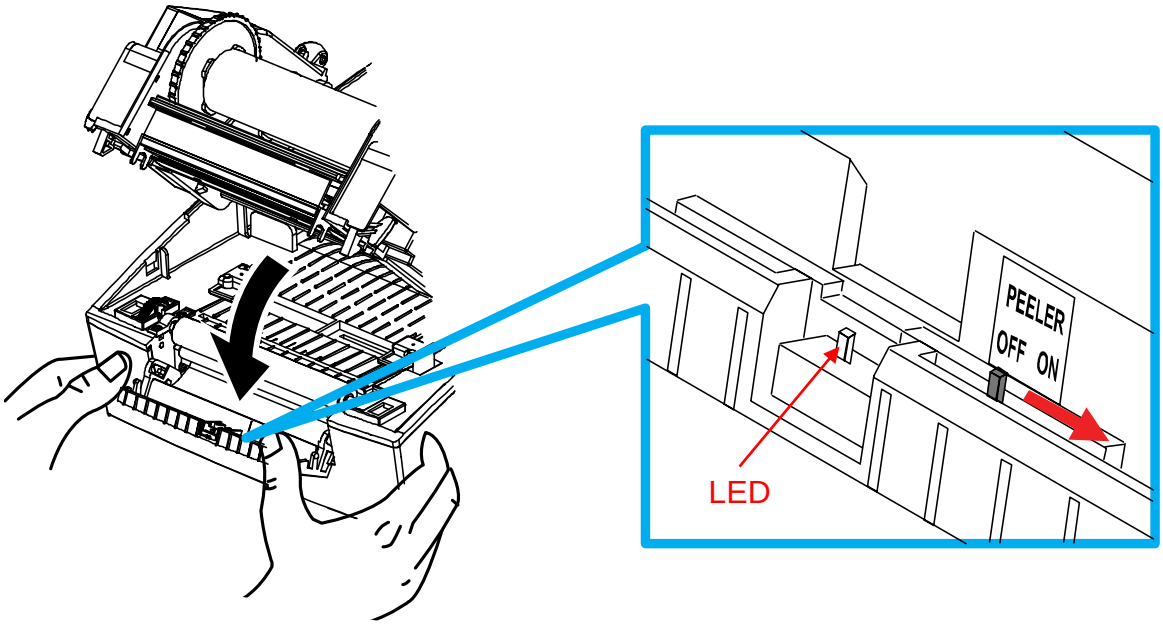


4) Remove one sheet of the label paper, and insert the paper as shown in the image below.
   - Prior to removing a label, the peeler switch must be set to the ON position.

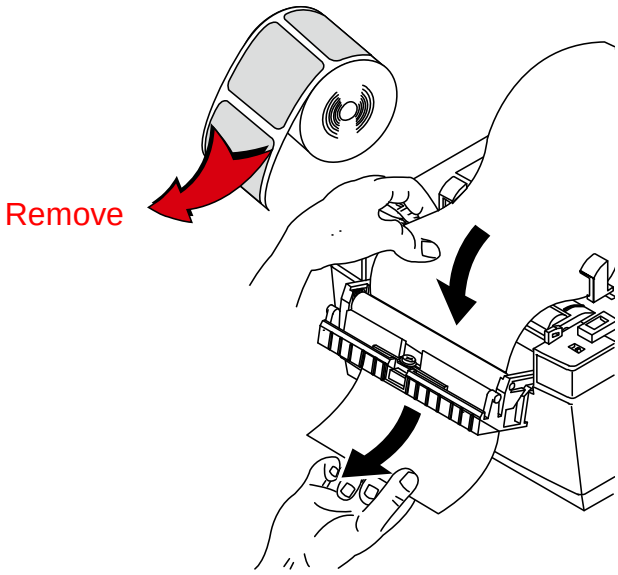

5) Adjust the paper guides and close the label peel-off cover.

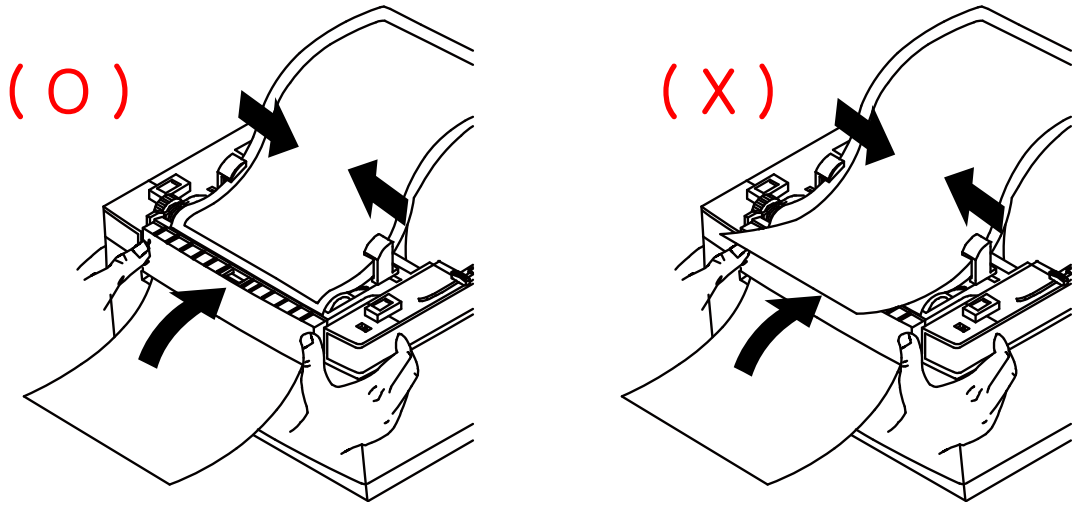


6) Close the Ribbon Assembly and paper covers.

## 5-7 Using Fan-Fold Paper

Supplying paper to the printer externally is done as follows.

5-7-1 Printer Preparation
Remove the rear paper supply cover on the back side of the printer with a knife or other cutting instrument.

※ **CAUTION**
- Take care not to injure the hands and/or any other part of the body when performing this step.

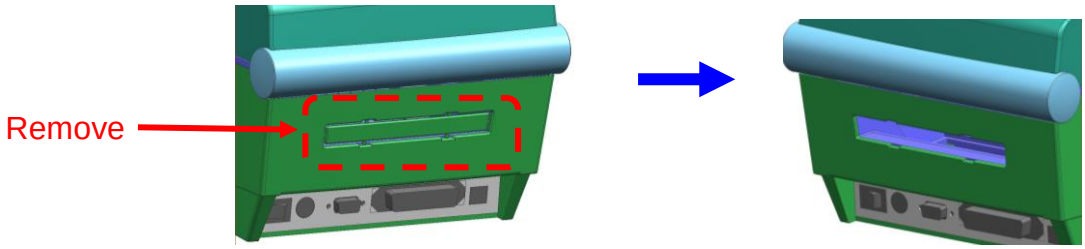


5-7-2 When Using Pan-Fold Paper
1) Insert the paper at the rear of the printer using the slot and guides.

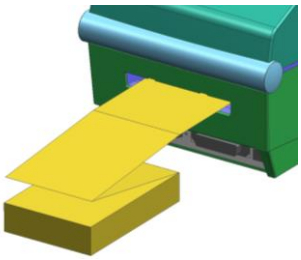

2) Adjust the holder and guides to the width of the paper.

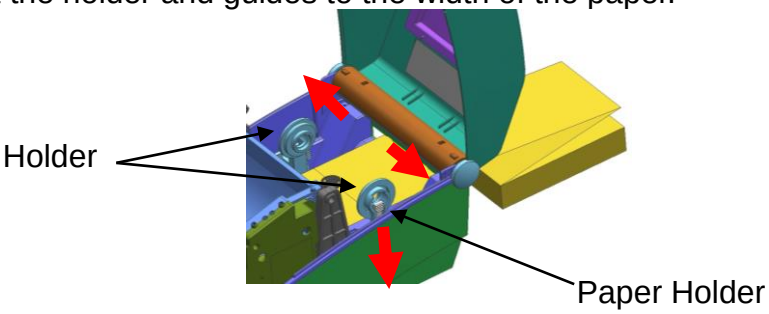


5-7-3 When using large-capacity paper roll (option)
※ install the paper in the same way as pan-fold paper.

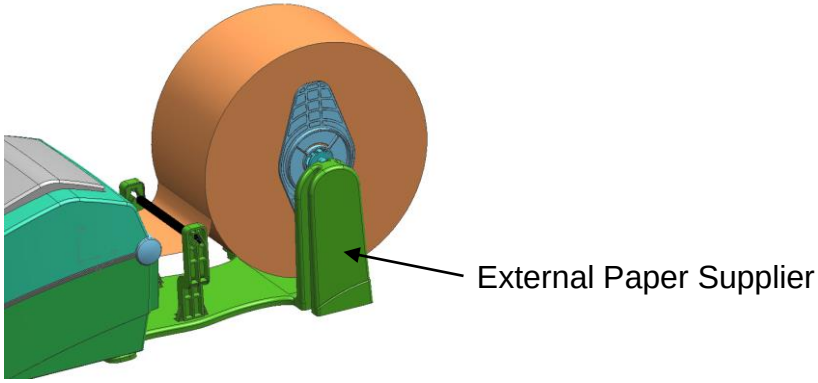

### 5-8 Auto Cutter (Option)

For auto paper cutting, products equipped with auto cutter are available.

In factory setting, the auto cutter is attached.

For printers with auto cutter, the dip switches from 1 to 7 are set to On.

※ The paper installation method is the same as paper with no auto cutter.

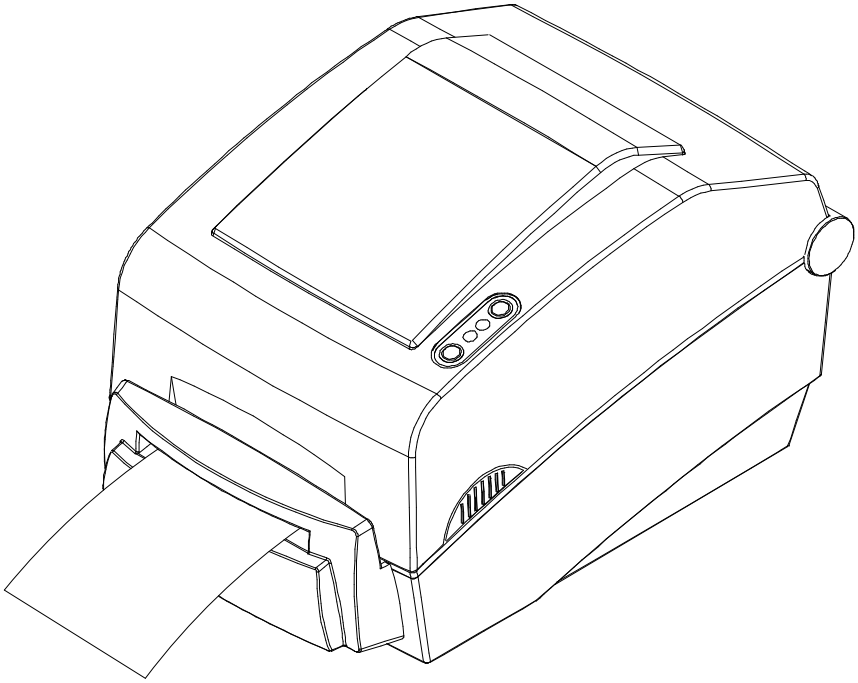

# 6. Cleaning Head

Printing quality might be degraded by dust, foreign substance, adhesive substance, or other pollution materials stuck in the printer head or inside the printer.

When dirty, clean the print head as follows:

※ **CAUTION**

- Make sure to turn the printer power off prior to cleaning.
- As the print head gets very hot during printing, if intending to clean the print head, turn the printer power off and wait approximately 2~3 minute before commencement.
- When cleaning the print head, take care not to touch the heated portion of the print head.
  → Printer Head is susceptible to damage from static electricity, etc.
- Take care not to allow the print head to become scratched and/or damaged in any way.

### 6-1 Cleaning Head

1) Open the paper cover and clean the printhead using the cloth or cotton swab soaked in alcohol for medical.

2) After cleaning the head, do not use the printer until the alcohol used for cleaning evaporates completely (1~2 min) and the printer has completely dried.

※ Perform the cleaning process each time the paper roll is replaced to prevent print quality deterioration.

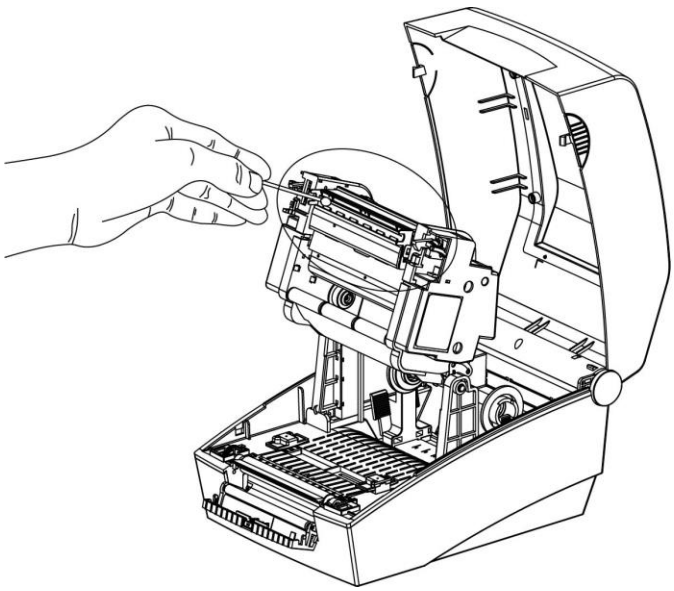

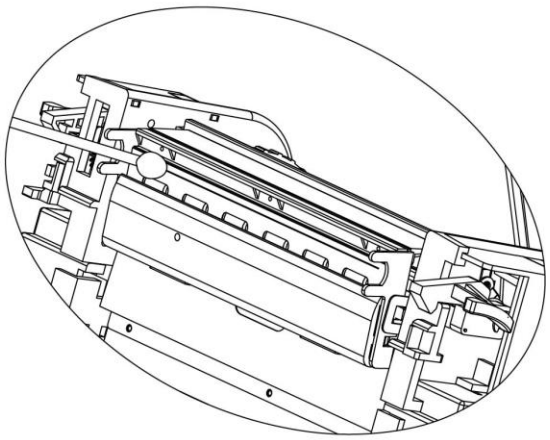

**6-2 Cleaning Sensors, Roller or/and Paper Path**

1) Open the paper cover and ribbon assembly, and remove the paper and ribbon.

2) Remove any dust or foreign substance using dry cloth or cotton swab.

3) Soak the cloth or cotton swab in alcohol for medical use and use it to remove adhesive foreign substances or other pollution materials.

4) After cleaning the parts, do not use the printer until the alcohol evaporates completely (1~2 min) and the printer has completely dried

※ Clean the parts when there is a degradation of performance in printing quality or paper detection.

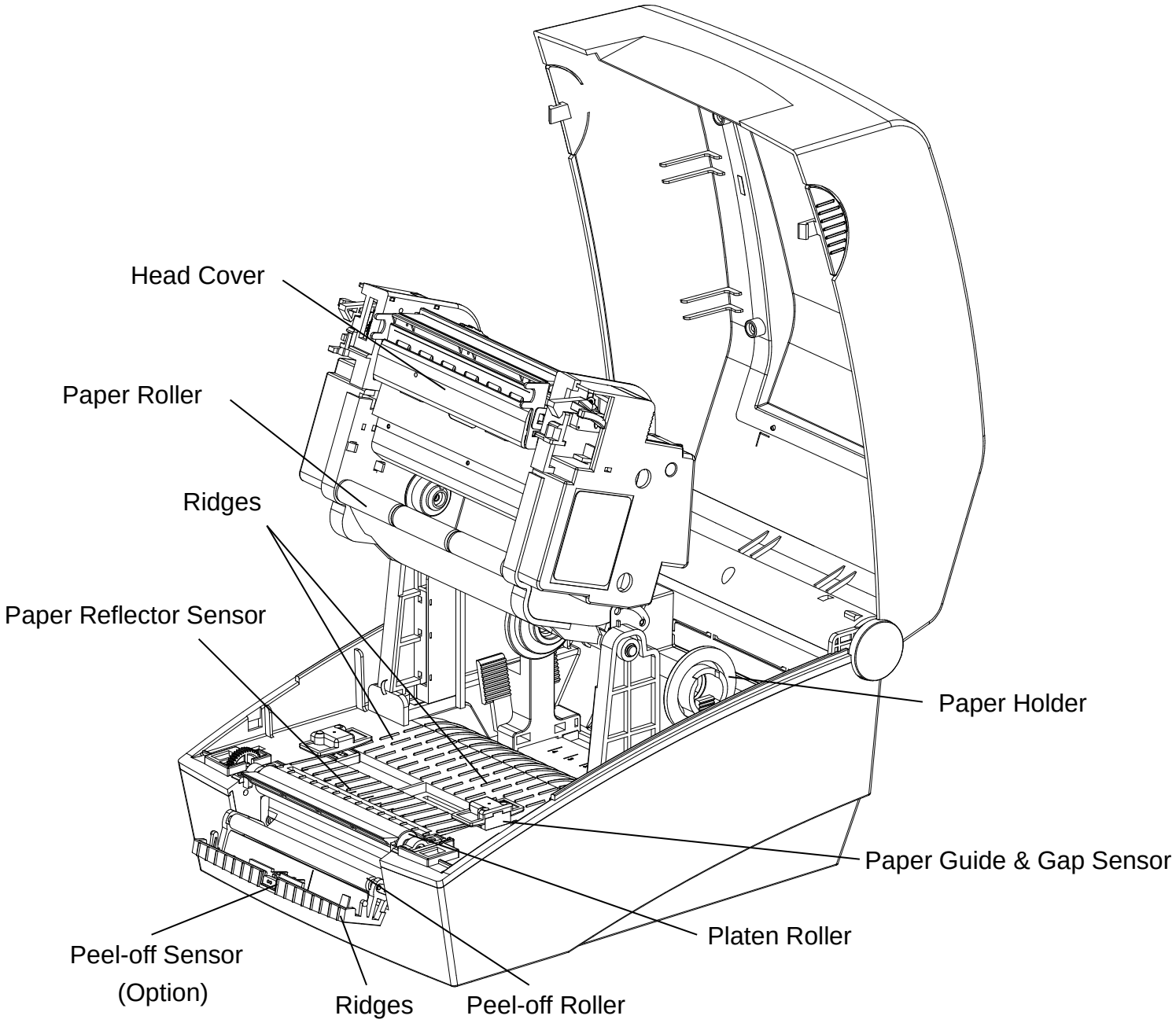

# 7. Appendix

## 7-1 Specifications

| Item | | Description |
|---|---|---|
| Printer | Printing Method | Thermal Transfer / Direct Thermal Printing |
| | Dot Density | SLP-T400 : 203 dpi (8 dot/mm)<br>SLP-T403 : 300 dpi (11.8 dot/mm) |
| | Printing Width | SLP-T400 : Max 104 mm<br>SLP-T403 : Max 105.7 mm |
| | Printing Speed | SLP-T400 : 152 mm/sec (6ips)<br>SLP-T403 : 100 mm/sec (4ips) |
| Paper | Width | 15 ~ 116 mm |
| | Roll | Max 130mm |
| | Core | 25.4~38.1mm (1~1.5”) |
| Ribbon | Length / Width | Max 300m / 33 ~ 110mm |
| | Type(Outside) | Wax, Wax/Resin, Resin |
| | Core | 0.5” / 1” |
| AC Adapter | Input Voltage | AC 100~240V |
| | Frequency | 50/60 Hz |
| | Output Voltage | DC 24V |
| Usage Conditions | Temperature | 5 ~ 40 ℃ (Operating)<br>-20 ~ 60 ℃ (Storage) |
| | Humidity (except for paper) | 10 ~ 80 % RH (Operating)<br>10 ~ 90 % RH (Storage) |

**※ Note**

- Printing speed can vary depending on the data transmission speed and combination of control commands.

- This equipment is indooruse and all the communication hiring are limited to inside of the building.

- The switch is the disconnecting device. Turn off switch from any hazard.

## 7-2 Certification

### 1) EMC & Safety Standards

- Europe: CE EMC,CB-Scheme:IEC60950-1, GS: EN60950-1: 2001
- North America: FCC rules parts 15B

***WARNING***

Use of an unprotected interface cable with this printer conflicts with EMC standards. Users should only use cables approved by BIXOLON.

### 2) CE Mark

| | |
|---|---|
| • EMC Directive 89/336/EEC | EN55002:1994+A1:1995+A2:1997<br>EN55024:1998+A1:2001+A2:2003<br>EN61000-3-2:2000<br>EN61000-3-3:1995+A1:2001<br>EN6100-4-2:1995+A1:1998+A2:2001<br>EN6100-4-3: 2002+A1:2002<br>EN6100-4-4:2004<br>EN6100-4-5:1995+A1:2001<br>EN6100-4-6:1996+A1:2001<br>EN6100-4-8:1993+A1:2001<br>EN6100-4-11:1994+A1:2001 |
| • Low Voltage Directive 73/23/EEC | Safety: EN60950-1:2001 |

### 3) WEEE (Waste Electrical and Electric Equipment)



This mark shown on the product or its literature indicates that the corresponding item should not be discarded at the end of its working life with other household waste. To prevent possible harm to the environment or human health from uncontrolled waste disposal, please separate marked items from other types of waste and recycle them responsibly to promote the sustained reuse of material resources. Household users should contact either the retailer where they purchased this product, or their local government office for details of where and how they can conduct environmentally safe recycling of such items. Commercial users should contact their suppliers and check the terms and conditions of purchase contracts. This product should not be combined with other commercial waste for disposal.

### 4) Rating Label Symbol Information



DC (Direct current)

## 7-3 Label Types

- PET

# Copyright

© BIXOLON Co., Ltd. All rights reserved.

This user manual and all property of the product are protected under copyright law.
It is strictly prohibited to copy, store, and transmit the whole or any part of the manual and any property of the product without the prior written approval of BIXOLON Co., Ltd.
The information contained herein is designed only for use with this BIXOLON product.
BIXOLON is not responsible for any direct or indirect damages, arising from or related to use of this information.

• The BIXOLON logo is the registered trademark of BIXOLON Co., Ltd.
• All other brand or product names are trademarks of their respective companies or organizations.

BIXOLON Co., Ltd. maintains ongoing efforts to enhance and upgrade the functions and quality of all our products.
In the following, product specifications and/or user manual content may be changed without prior notice.

# Caution

Some semiconductor devices are easily damaged by static electricity. You should turn the printer “OFF”, before you connect or remove the cables on the rear side, in order to guard the printer against the static electricity. If the printer is damaged by the static electricity, you should turn the printer “OFF”.

# Compliance information

This device complies with Part 15 of the FCC Rules. Operation is subject to the following two conditions: (1) This device may not cause harmful interference, and (2) This device must accept any interference received, including interference that may cause undesired operation.

This equipment has been tested and found to comply with the limits for a Class A digital device pursuant to Part 15 of the FCC Rules. These limits are designed to provide reasonable protection against harmful interference when the equipment is operated in a commercial environment. This equipment generates uses, and can radiate radio frequency energy and, if not installed and used in accordance with the instruction manual, may cause harmful interference to radio communications. Operation of this equipment in a residential area is likely to cause harmful interference in which case the user will be required to correct the interference at his own expense.

Caution: Exposure to Radio Frequency Radiation.
To comply with FCC RF exposure compliance requirements, a separation distance of at least 20 cm must be maintained between the antenna of this device and all persons.

Caution: Any Changes or modifications not expressly approved by the manufacturer could void the user's authority to operate the equipment.

Class A Digital Device : Wired Device
This Apparatus complies with class “A” limits for radio interference as specified in the Canadian department of communications radio interference regulations.

This Class A digital apparatus complies with Canadian ICES-003.

Appareil numérique de classe A: appareil filaire
Get appareil est conforme aux normes class “A” d’interference radio tel que specifier par ministre canadien des communications dans les reglements d’interference radio.

Cet appareil numérique de la classe A est conform à la norme NMB-003 du Canada.

# Waste Electrical and Electric Equipment (WEEE)



This marking shown on the product or its literature, indicates that is should not be disposed with other household wastes at the end of its working life, To prevent possible harm to the environment or human health from uncontrolled waste disposal, please separate this from other types of wastes and recycle it responsibly to promote the sustainable reuse of material resources. Household users should contact either the retailer where they purchased this product, or their local government office, for details of where and how they can take this item for environmentally safe recycling. Business users should contact their supplier and check the terms and conditions of the purchase contract. This product should not be mixed with other commercial wastes for disposal.